Technical Data Sheet

RACM150S-K/277 Series ◊ AC-DC Power Supply

150W ◊ Input: 100V-277VAC; 2”x 3” plus baseplate

RECOM
AC/DC Converter

FEATURES

- Nominal input voltage range: 100V–277VAC
- Up to 130W still air convection cooled ratings
- 225W boost power for up to 5s
- -40° to +85°C ambient temperature ratings
- 2”x3” footprint
- Conduction cooling base plate
- Open frame and enclosed construction
- 3 year warranty

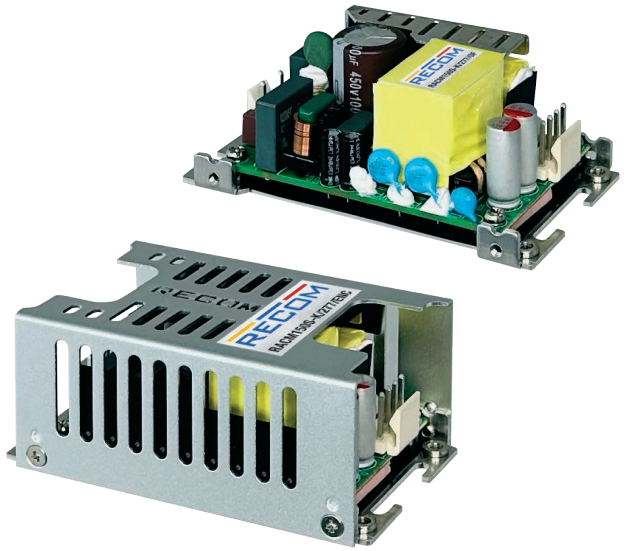

Open frame: 94.9 x 55.2 x 36.5mm (3.72 x 2.17 x 1.44 inch)
Enclosed: 94.9 x 57.2 x 38.0mm (3.72 x 2.25 x 1.49 inch)

APPLICATIONS

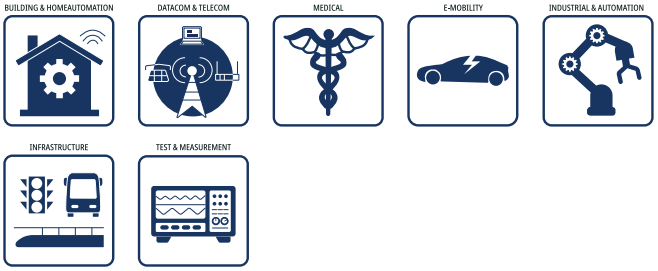

SAFETY & EMC

RoHS² compliant 10 from 10 | Reach compliant | CE | cULus E224736 | IECEE CB SCHEME | HOUSEHOLD CERTIFIED EN-60335-1

DESCRIPTION

The compact 2” x 3” RACM150S-K power supplies achieve a high power density of up to 26 W/in³ and deliver up to 225 watts of boost power to support dynamic loads. With only 1 m/s of airflow, they provide up to 150 watts of continuous output power, while up to 130 watts are available under natural convection. Operating from a wide input voltage range of 85–305 VAC, these AC/DC power supplies are available either as enclosed units or in an open-frame version with a pre-mounted baseplate for enhanced heat dissipation through contact cooling. They are designed to operate over a wide temperature range from -40 °C to +85 °C. Integrated filtering ensures compliance with EN 55032 Class B, simplifying system integration without the need for additional external filters. The RACM150S-K series also meets the requirements for Overvoltage Category III (OVC III), supporting use in industrial and residential applications. For medical applications, the series provides 2MOPP isolation and meets the relevant touch-current requirements for BF applications.

SELECTION GUIDE

Part Number	Input Voltage Range [VAC]	Output Voltage nom. [VDC]	Output Current com. [A]	Boost Current (1) max. [A]	Efficiency (2) typ. [%]	Output Power continuous [W]
RACM150S-12SK/277 (4)	80-305	12	12.5	25	91	150W
RACM150S-15SK/277 (4)	80-305	15	10	21	91	150W
RACM150S-24SK/277 (4)	80-305	24	6.25	13	92	150W
RACM150S-36SK/277 (4)	80-305	36	4.166	8.5	92	150W
RACM150S-48SK/277 (4)	80-305	48	3.125	7	92	150W

Note1: Refer to “**„Boost Power Duty Cycle“.**
Note2: Efficiency is tested at nominal input and rated load at +25°C ambient.

copyright © RECOM Power GmbH, all rights reserved

RACM150S-K/277 Series ◊ AC-DC Power Supply

150W ◊ Input: 100V-277VAC; 2"x 3" plus baseplate

RECOM AC/DC Converter

MODEL NUMBERING

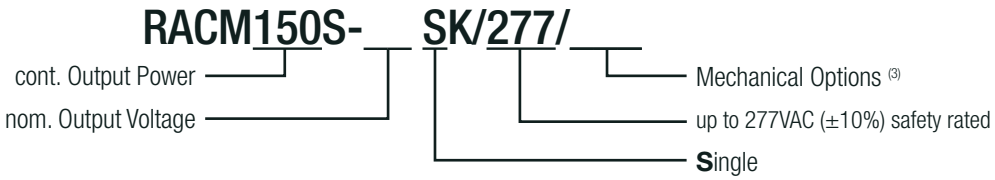

Note3: "/OF"= 3.72" x 2.17" open frame version
"/ENC"= 3.72" x 2.25" enclosed version
for 2"x3" open naked board consult RECOM tech support

Note4: RACM150S-xxSK/277/ONB, variant with open PCBA and no Baseplate: on request
RACM150S-xxSK/277/KTP/ENC, variant with Input Klick-Terminal and Output Push in Terminal: on request

ORDERING INFORMATION

Model	nom. Output Voltage	Package Type	
		3.72" x 2.17" open frame "**/OF**"	3.72" x 2.25" enclosed "**/ENC**"
RACM150S-12SK/277	12VDC	y	y
RACM150S-15SK/277	15VDC	y	y
RACM150S-24SK/277	24VDC	y	y
RACM150S-36SK/277	36VDC	y	y
RACM150S-48SK/277	48VDC	y	y

y= standard portfolio; on request= MOQ may apply on project base; N/A= not available

BASIC CHARACTERISTICS (measured @ T_{AMB}= 25°C, nom. V_{IN}, full load and after warm-up unless otherwise stated)

Parameter	Condition		Min.	Typ.	Max.
Nominal Input Voltage	50/60Hz	according to 60601-1	100VAC		240VAC
		according to 62368-1, 61558, 60335-1	100VAC		277VAC
Operating Range (5)	47-63Hz		80VAC		305VAC
Output Voltage Range				±10%	
Input Current					2A
Inrush Current	cold start at 25°C	120VAC			40A
		230AVC			70A
		277VAC			90A
No Load Power Consumption	230VAC			100mW	
Input Frequency Range	AC operation		50Hz		60Hz
Output Voltage Trimming				±10%	
Output Voltage Adjustability (6)	on-board trim potentiometer, refer to **„DIMENSION & PHYSICAL CHARACTERISTICS"**			±10%	
Minimum Load			0%		
Power Factor			0.9	0.98	
Start-up time					500ms
Rise time					2ms
Hold-up time	230VAC		20ms	30ms	
Internal Operating Frequency					150kHz
Output Ripple and Noise (7)	20MHz BW				120mVp-p

Note5: The products were submitted to all safety files at AC-operation. (90V-305VAC)

Note6: Make sure that the maximum rated output power will not be exceeded when trimming up.

Note7: Measurements are made with a 0.1µF MLCC & 10µF E-cap in parallel across output (low ESR).
The test setup can have an impact on ripple noise values (placement of scope probe, capacitors, it's specifications, wires, PCB tracks, distances, etc.)

copyright © RECOM Power GmbH, all rights reserved

RACM150S-K/277 Series ◊ AC-DC Power Supply

150W ◊ Input: 100V-277VAC; 2"x 3" plus baseplate

RECOM AC/DC Converter

BASIC CHARACTERISTICS (measured @ T_{AMB}= 25°C, nom. V_{IN}, full load and after warm-up unless otherwise stated)

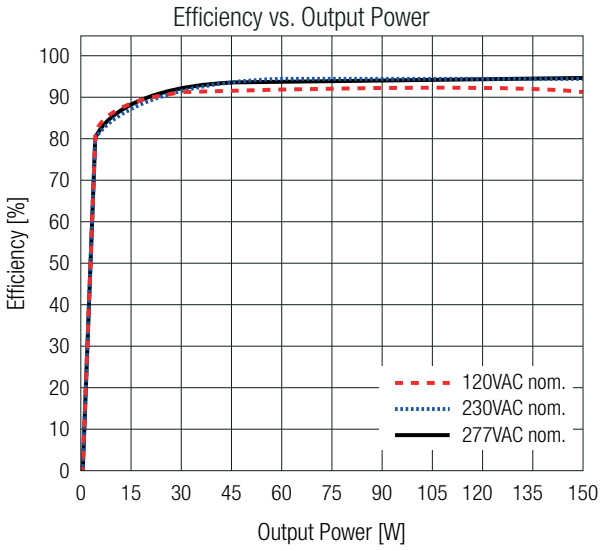

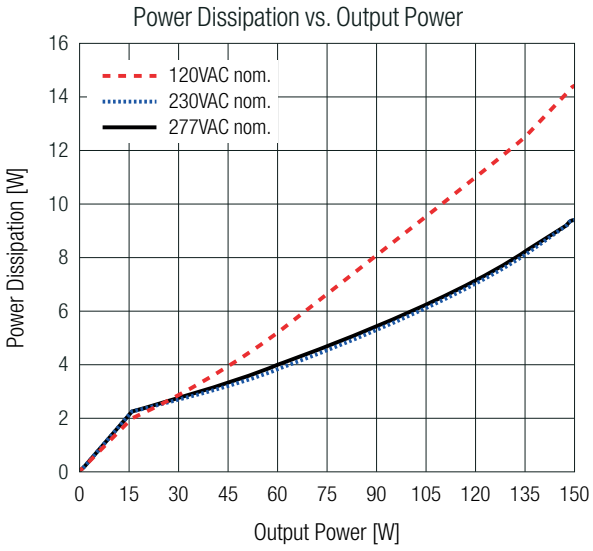

REGULATIONS (measured @ T_{AMB}= 25°C, nom. V_{IN}, full load and after warm-up unless otherwise stated)

Parameter	Condition	Value
Output Accuracy		±3.0% max.
Line Regulation	low line to high line	±1.0% max.
Load Regulation [8]	10% to 100% load	2.0% max.
Transient Response		800mV max.
	recovery time	1.2ms max.

Note8: Operation below 10% load will not harm the converter, but specifications may not be met.

PROTECTIONS (measured @ T_{AMB}= 25°C, nom. V_{IN}, full load and after warm-up unless otherwise stated)

Parameter	Type		Value
Internal Input Fuse	dual-fusing (L & N)		2x T4A, slow blow
Short Circuit Protection (SCP)			hiccup mode
Over Voltage Protection (OVP)			120% - 150%, latch off mode
Over Voltage Category (OVC)	according to 62368-1, 60601-1, 61558, 60335-1		OVC II (5000m)
	according to 62368-1, 61558, 60335-1		OVC III (2000m)
Over Current Protection (OCP)			105% - 210%, hiccup mode
DC OK LED			yes
Class of Equipment	dependent on build in conditions		Class I or Class II
Isolation Voltage [9]	1 minute	according to 61558	4.2kVAC
		according to 62368-1	6kVDC
Isolation Resistance			1GΩ min.
Isolation Capacitance			100pF max.
Insulation Grade	I/P to O/P		reinforced
Means of Protection	I/P to O/P		2MOPP
Medical Device Classification	built-in power supply		designed to support type BF applications
Touch Current	305VAC/63Hz	normal condition	<100µA
		single fault	<500µA

Note9: For repeat Hi-Pot testing, reduce the time and/or the test voltage.

copyright © RECOM Power GmbH, all rights reserved
www.recom-power.com

RACM150S-K/277 Series ◊ AC-DC Power Supply

150W ◊ Input: 100V-277VAC; 2"x 3" plus baseplate

RECOM AC/DC Converter

ENVIRONMENTAL (measured @ T_{AMB}= 25°C, nom. V_{IN}, full load and after warm-up unless otherwise stated)

Parameter	Condition			Value
Operating Ambient Temperature Range				-40°C to +85°C
Operating Altitude	according to 62368-1, 60601-1, 61558, 60335-1			5000m (OVC II)
	according to 62368-1, 61558, 60335-1			2000m (OVC III)
Operating Humidity	non-condensing			90% RH max.
Pollution Degree				PD2
Vibration				half Sine 100m/s², 11ms duration, 100 pulse per direction
Shock				5-500Hz, 20m/s² 15 min for each axis
MTBF	according to MIL-HDBK-217, G.B.	100VAC	T_{AMB}= 25°C	269 x 10³ hours
			T_{AMB}= 40°C	228 x 10³ hours
		230VAC	T_{AMB}= 25°C	278 x 10³ hours
			T_{AMB}= 40°C	238 x 10³ hours
Design Lifetime	230VAC, 120W load	RACM150S-12SK/277		8.9 x 10³ hours
		RACM150S-15SK/277		27.3 x 10³ hours
		RACM150S-24SK/277		16 x 10³ hours
		RACM150S-36SK/277		21.9 x 10³ hours
		RACM150S-48SK/277		36.4 x 10³ hours

Convection cooled rating @ still air <0.1m/s[10]

RACM150S-12SK/277/OF, RACM150S-12SK/277/ENC
RACM150S-15SK/277/OF, RACM150S-15SK/277/ENC

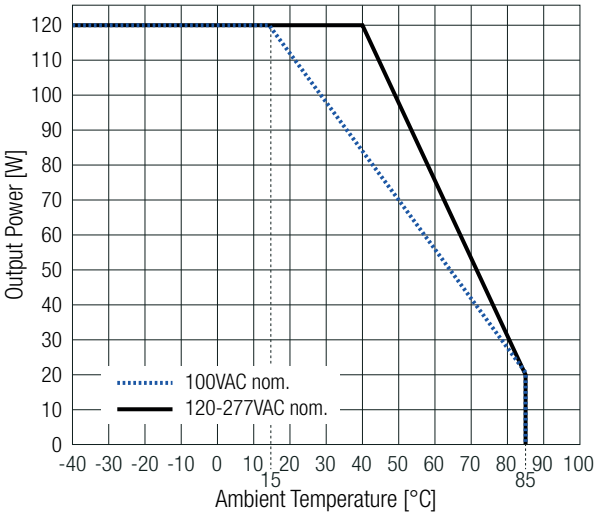

RACM150S-24SK/277/ENC, RACM150S-36SK/277/OF,
RACM150S-48SK/277/OF, RACM150S-48SK/277/ENC

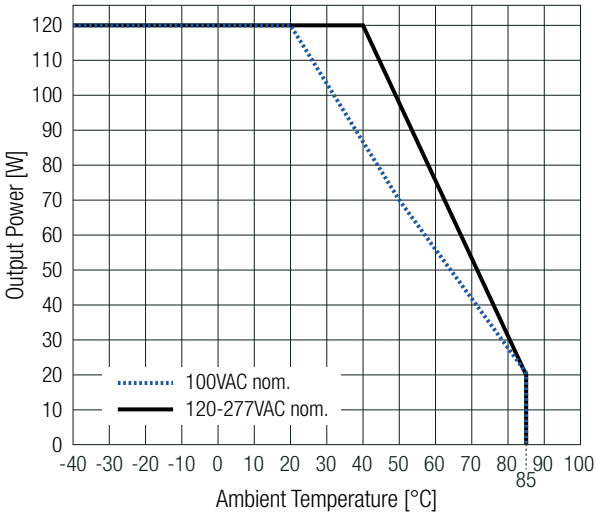

RACM150S-24SK/277/OF

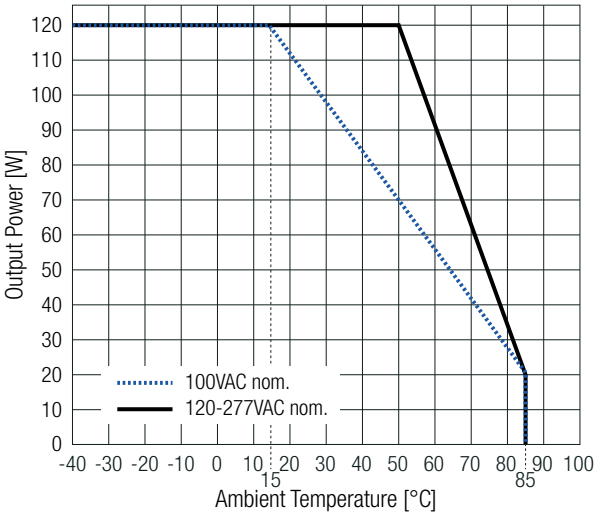

RACM150S-36SK/277/ENC

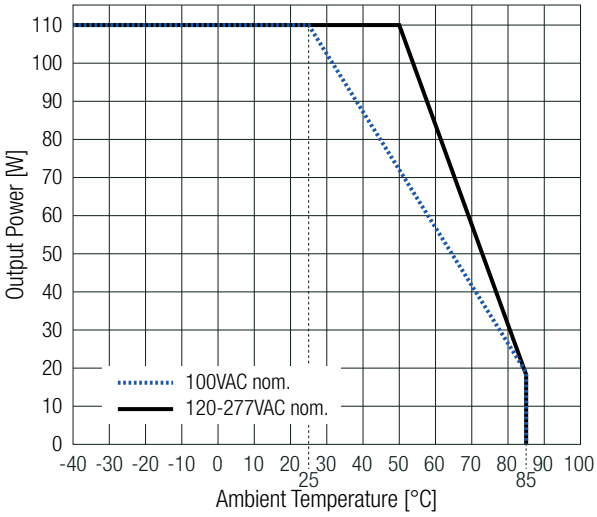

Note10:The input voltage range covered by UL/IEC 60601-1 is limited to 100–240VAC.
The full 100–277VAC input range is covered by all other applicable standards.

copyright © RECOM Power GmbH, all rights reserved

RACM150S-K/277 Series ◊ AC-DC Power Supply

150W ◊ Input: 100V-277VAC; 2"x 3" plus baseplate

RECOM AC/DC Converter

ENVIRONMENTAL (measured @ T_{AMB}= 25°C, nom. V_{IN}, full load and after warm-up unless otherwise stated)

Conduction cooled rating with 2mm Alu-plate A5 (10)

RACM150S-12SK/277/OF, RACM150S-12SK/277/ENC

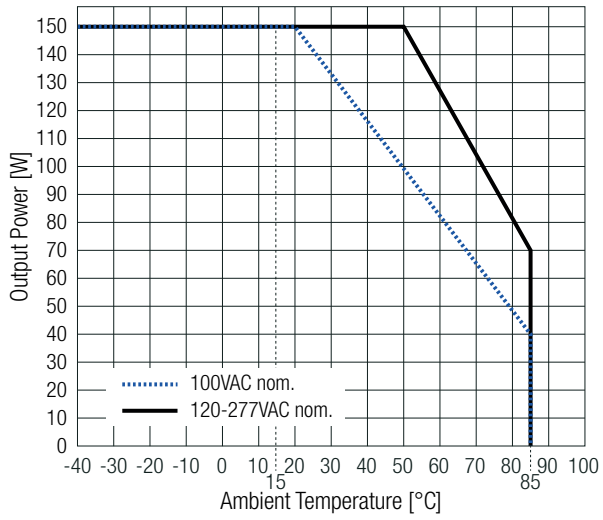

all other Versions

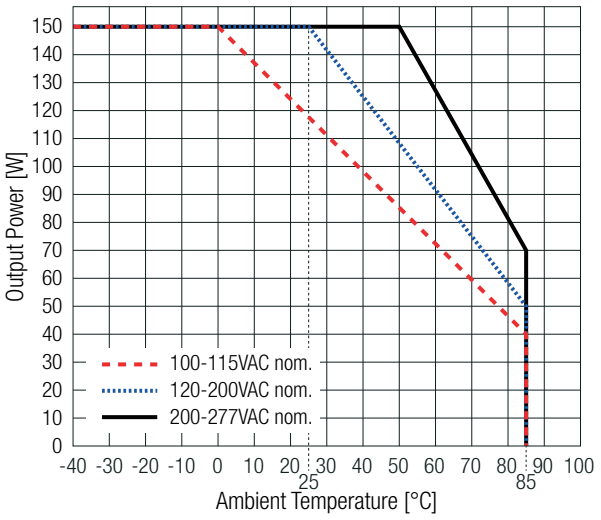

Air flow rating @ 2.5m/s and 2cm stand-off pillars (10)

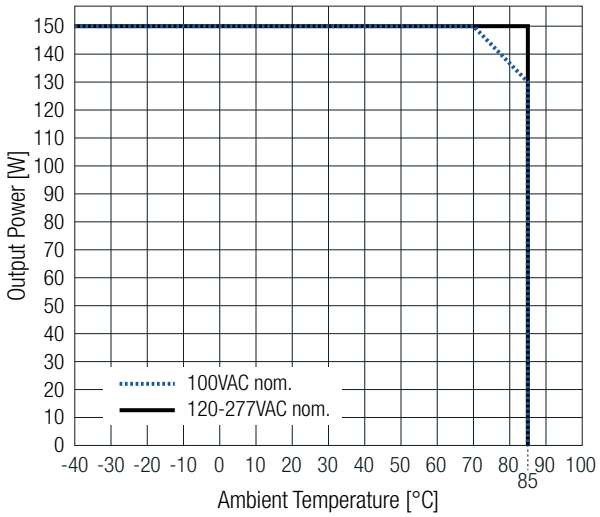

Note10:The input voltage range covered by UL/IEC 60601-1 is limited to 100–240VAC.
The full 100–277VAC input range is covered by all other applicable standards.

BOOST POWER DUTY CYCLE

Parameters	Units	
P_{rated}= rated output power	[W]	see Graphs above
P_{boost}= boost power	[W]	225W max.
P_r= recovery output power	[W]	use calculation
t_1= boost time set	[s]	5s max.
t_2= recovery time	[s]	min. 11 x t_1
k= heat dissipation factor	[ ]	1.1

Calculation:

$$P_r = \frac{P_{rated} \times (t_1 + t_2) - (P_{Boost} \times t_1)}{t_2 \times k}$$

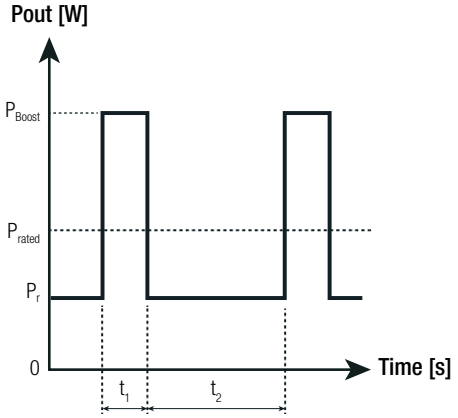

Practical Example (RACM150S-24SK/277 for still air convection):

Take the RACM150S-24SK/277/OF at 277VAC input voltage and at T_{AMB}= 50°C, with forced air (1m/s) convection.

P_{Boost} = 225W
P_{rated} = 150W
t_1 = 5s
t_2 = 11 x t_1
k = 1.1

$$P_r = \frac{150 \times (5 + 55) - (225 \times 5)}{55 \times 1.1} = \underline{130W}$$

copyright © RECOM Power GmbH, all rights reserved

INSTALLATION & APPLICATION

Preferred airflow direction
valid for “/OF” and /ENC”

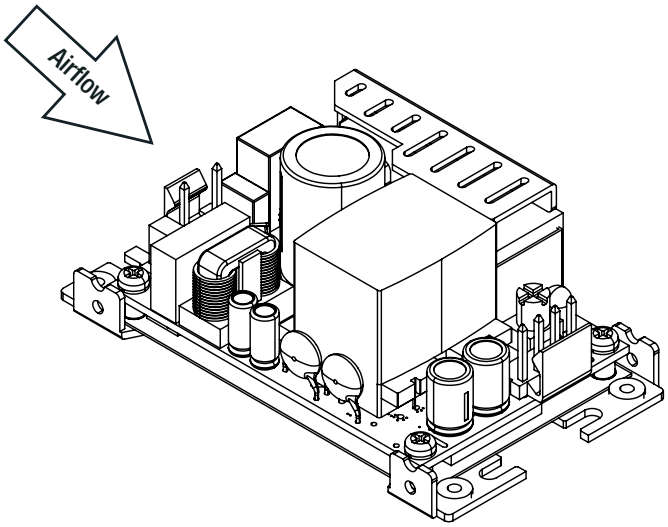

Mounting Equipment

Baseplate Mounting

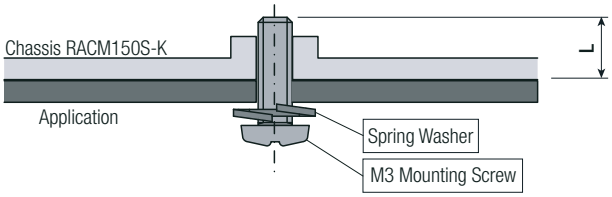

Recommended mounting tightening torque= 0.7Nm.
L= 4mm min. / 8mm max.

Side Mounting

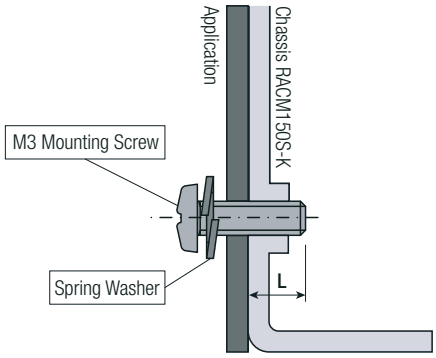

Recommended mounting tightening torque= 0.7Nm.
L= 4mm min. / 8mm max.

SAFETY & CERTIFICATIONS

Certificate Type (Safety)	Report Number	Standard
Audio/Video, information and communication technology equipment - Part1: Safety requirements 3rd Edition	E491408-A6045-UL	UL62368-1:2019 3rd Edition
		CAN/CSA-C22.2 No. 62368-1:19 3rd Edition
Audio/Video, information and communication technology equipment - Part1: Safety requirements 3rd Edition	25101300901	IEC62368-1:2018 3rd Edition
		EN IEC 62368-1:2020 + A11:2020
Medical electrical equipment Part 1: General requirements for basic safety and essential performance	E511305-D6007-UL	ANSI/AAMI ES60601-1:2005 + A2:2010
		CAN/CSA-C22.2 No. 60601-1:14 3rd Edition
Medical electrical equipment Part 1: General requirements for basic safety and essential performance	25101301001	IEC60601-1:2005+AM2:2020 Edition 3.2
Household and similar electrical appliances – Safety – Part 1: General requirements	64.110.25.07195.01	IEC60335-1:2020 6th Edition
		EN60335-1:2023 + A11:2023
Measurement methods for electromagnetic fields of household appliances and similar apparatus with regard to human exposure		EN62233:2008 + AC:2008
Safety of power transformers, power supplies, reactors and similar products for supply voltages up to 1100 V 3rd Edition	085-250719401-000	IEC61558-1:2017 3rd Edition
Safety of power transformers, power supplies, reactors and similar products for supply voltages up to 1100 V Part 2: Particular requirements		IEC61558-2-16:2021 2nd Edition
RoHS2		RoHS-2011/65/EU + AM-2015/863

copyright © RECOM Power GmbH, all rights reserved

SAFETY & CERTIFICATIONS

EMC Compliance according to EN55032	Condition	Standard
Electromagnetic compatibility of multimedia equipment – Emission Requirements		EN55032:2015+A11:2020

EMC Compliance according to EN61204-3	Condition	Standard
Low voltage power supplies, d.c. output Part 3: Electromagnetic compatibility (EMC)		EN IEC 61204-3:2018
ESD Electrostatic discharge immunity test	Contact: ±4kV	IEC61000-4-2:2008, Criteria A EN61000-4-2:2009, Criteria A
Radiated, radio-frequency, electromagnetic field immunity test	10V/m (80-1000MHz), 3V/m (1400-2000MHz), 1V/m (2000-2700MHz	IEC/EN61000-4-3:2006 + A2:2010
Fast Transient and Burst Immunity	AC Port: L, N, L-N: ±2kV	IEC/EN61000-4-4:2012, Criteria A
Surge Immunity	AC Port: , L-N: ±0.5, 1.0kV L-PE, N-PE: ±1.0, 2.0kV	IEC/EN61000-4-5:2014 + A1:2017, Criteria A
Immunity to conducted disturbances, induced by radio-frequency fields	10Vrms (0.15-80MHz)	IEC61000-4-6:2013, Criteria A EN61000-4-6:2014, Criteria A
Power Magnetic Field Immunity	30A/m	IEC61000-4-8:2009, Criteria A EN61000-4-8:2010, Criteria A
Limits of Harmonic Current Emissions		EN IEC 61000-3-2:2019
Limits of Voltage Fluctuations & Flicker		EN61000-3-3:2013+A1:2019

EMC Compliance according to EN60601-1-2	Condition	Standard
Medical electrical equipment Part 1-2: General requirements for basic safety and essential performance		EN60601-1-2:2015 + A1:2021
ESD Electrostatic discharge immunity test	Contact: ±4kV	IEC61000-4-2:2008 EN61000-4-2:2009
Radiated, radio-frequency, electromagnetic field immunity test	10 V/m (80-2700MHz), 27V/m (385MHz), 9V/m (710, 745, 780MHz), 28V/m (810, 870, 930MHz), 28V/m (1720, 1845, 1970MHz), 28V/m (2450MHz), 9V/m (5240, 5500, 5785MHz)	IEC/EN61000-4-3:2006 + A2:2010
Fast Transient and Burst Immunity	AC Port: L, N, L-N: ±2kV	IEC/EN61000-4-4:2012
Surge Immunity	AC Port: L-N: 0.5, 1kV, AC Port: L-PE & N-PE: ±1, 2kV	IEC/EN61000-4-5:2014 + A1:2017
Immunity to conducted disturbances, induced by radio-frequency fields	3Vrms (0.15-80MHz), 6Vrms (ISM bands))	IEC61000-4-6:2013 EN61000-4-6:2014
Power Magnetic Field Immunity	30A/m	IEC61000-4-8:2009 EN61000-4-8:2010
Voltage Dips	100% (1.0P , 0.5P) 30%	IEC/EN61000-4-11:2004 + A1:2017
Voltage Interruptions	100%	IEC/EN61000-4-11:2004 + A1:2017
Limits of Harmonic Current Emissions		IEC61000-3-2:2005 + A2:2009
Limits of Voltage Fluctuations & Flicker		IEC61000-3-3:2013

copyright © RECOM Power GmbH, all rights reserved

RACM150S-K/277 Series ◊ AC-DC Power Supply

150W ◊ Input: 100V-277VAC; 2"x 3" plus baseplate

RECOM AC/DC Converter

DIMENSION & PHYSICAL CHARACTERISTICS

Parameter	Type	Value
Materials	PCB	FR4, (UL94 V-0)
	chassis	aluminum
Dimension (LxWxH)	"/OF"	94.9 x 55.2 x 36.5mm 3.72 x 2.17 x 1.44 inch
	"/ENC"	94.9 x 57.2 x 38.0mm 3.72 x 2.25 x 1.49 inch
Weight	"/OF"	195g typ. 0.43 lbs
	"/ENC"	215g typ. 0.47 lbs

Dimension Drawing "/OF" version (mm)

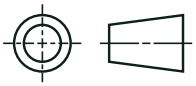

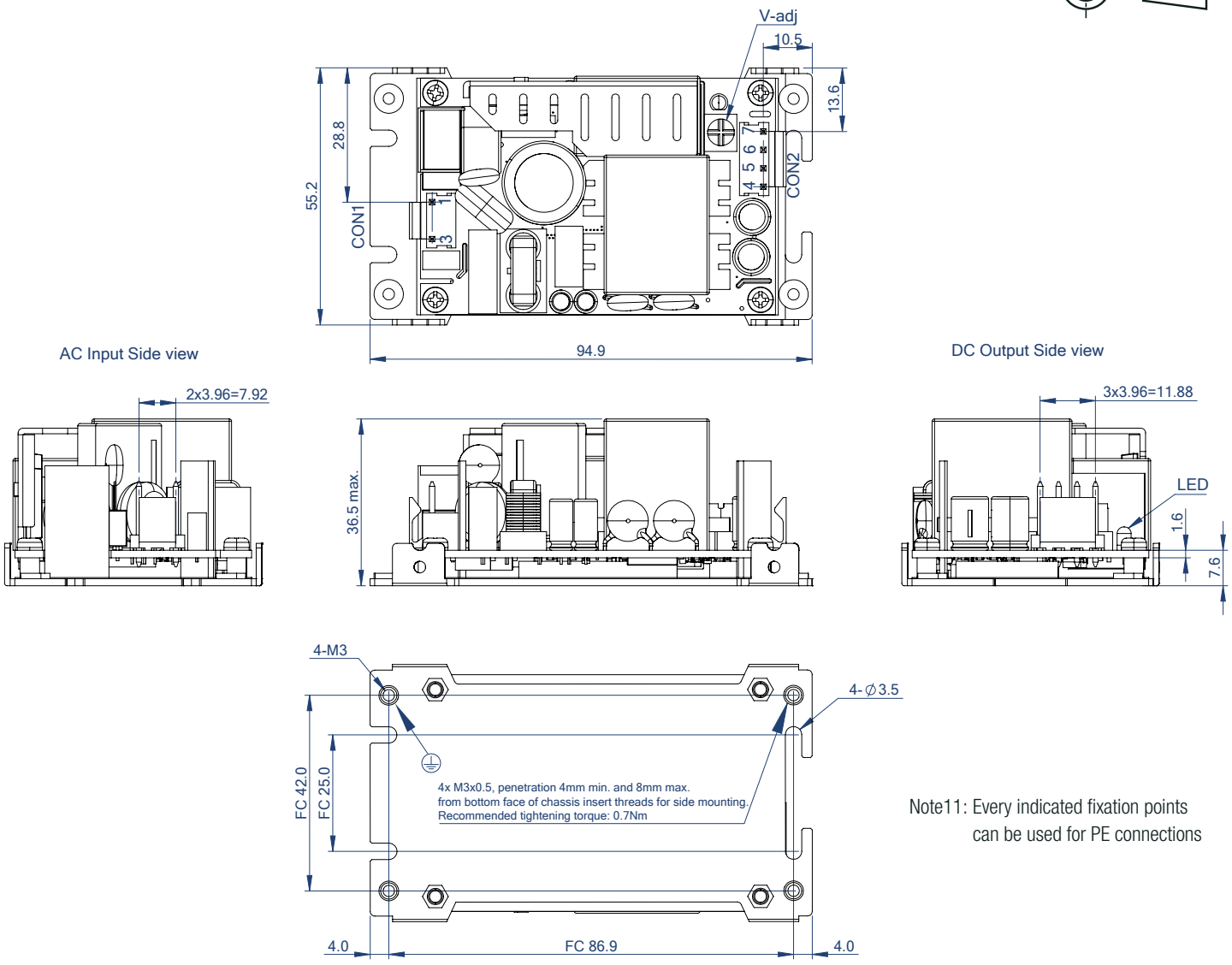

Note11: Every indicated fixation points can be used for PE connections

Connector Information

AC Input (CON1)		
#	Function	Connector description
1	VAC in (N)	3 Pins (Pin2 removed)
3	VAC in (L)	with 3.96mm pitch

DC Output (CON2)		
#	Function	Connector description
4, 5	+Vout	4 Pins
6, 7	-Vout	with 3.96mm pitch

FC= Fixing centers

Compatible Connector

Housing	Crimp Terminal
Molex 41695 Series or equivalent	Molex 2478 Series or equivalent

Tolerance: xx.x= ±0.5mm
xx.xx= ±0.25mm

copyright © RECOM Power GmbH, all rights reserved
www.recom-power.com

RACM150S-K/277 Series ◊ AC-DC Power Supply

150W ◊ Input: 100V-277VAC; 2”x 3” plus baseplate

AC/DC Converter

DIMENSION & PHYSICAL CHARACTERISTICS

Dimension Drawing “/ENC” version (mm)

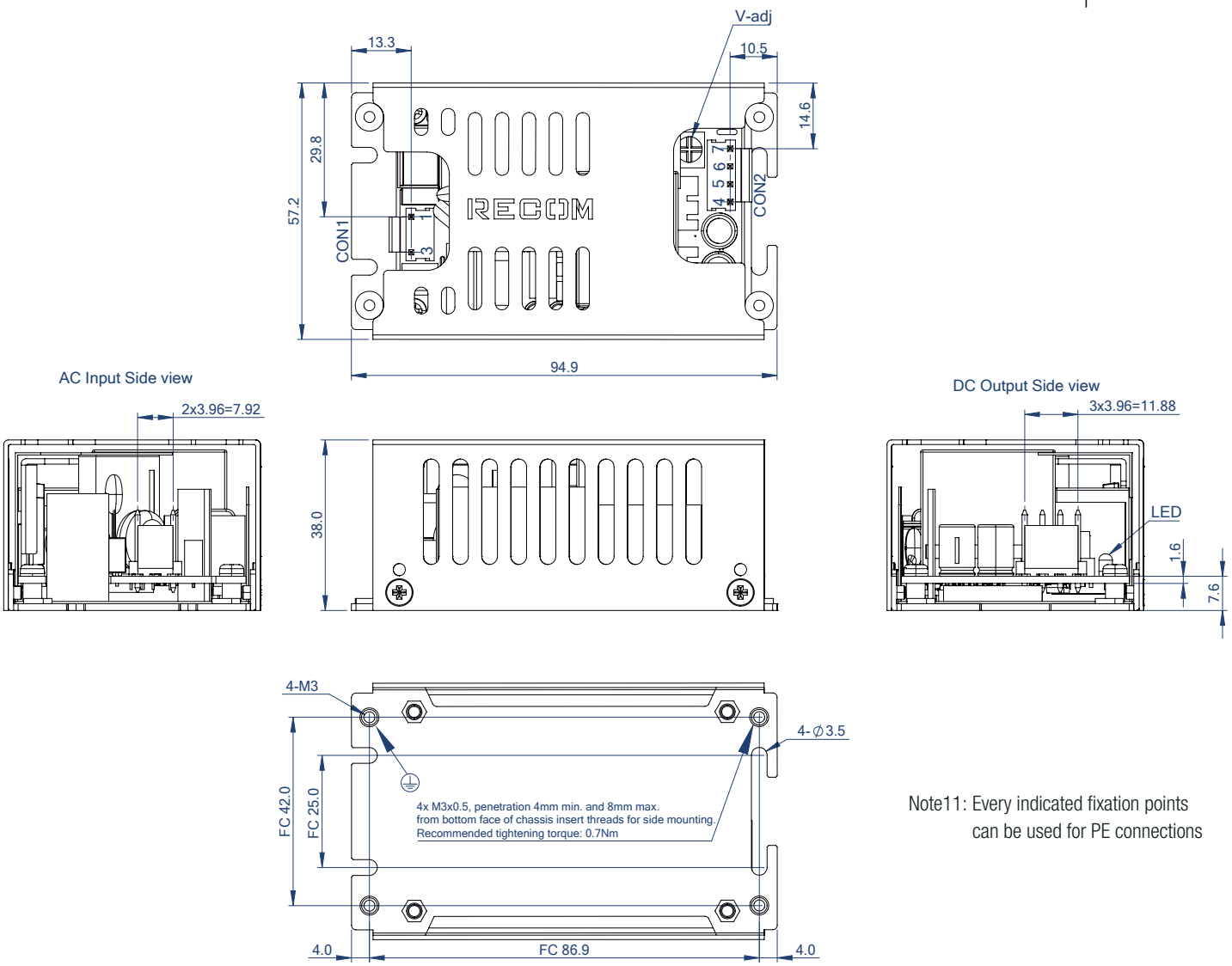

Note11: Every indicated fixation points can be used for PE connections

Connector Information

AC Input (CON1)

#	Function	Connector description
1	VAC in (N)	3 Pins (Pin2 removed)
3	VAC in (L)	with 3.96mm pitch

DC Output (CON2)

#	Function	Connector description
4, 5	+Vout	4 Pins
6, 7	-Vout	with 3.96mm pitch

FC= Fixing centers

Compatible Connector

Housing	Crimp Terminal
Molex 41695 Series or equivalent	Molex 2478 Series or equivalent

Tolerance: xx.x= ±0.5mm
xx.xx= ±0.25mm

copyright © RECOM Power GmbH, all rights reserved

BLOCK DIAGRAM

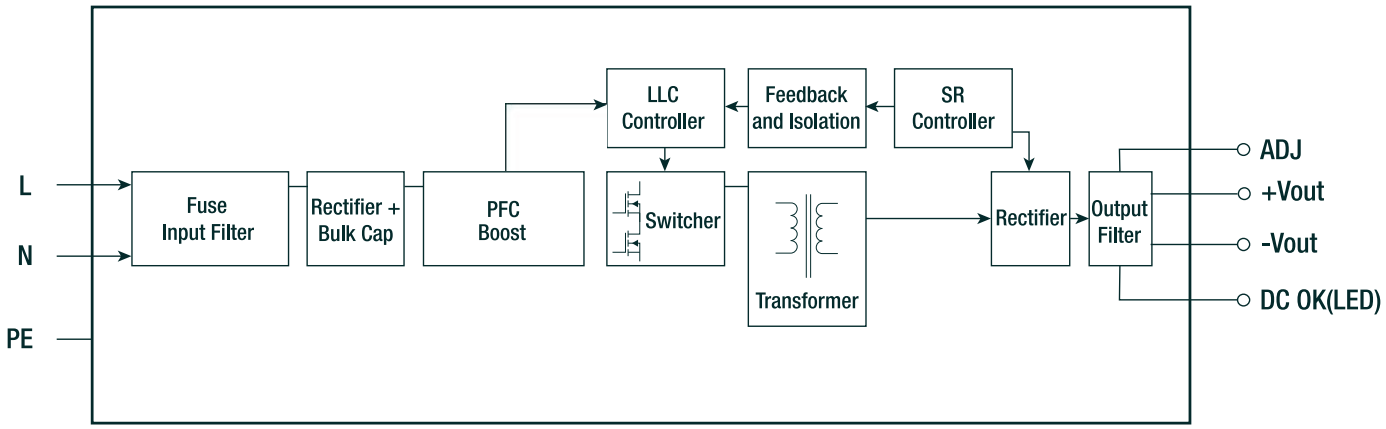

PACKAGING INFORMATION

Parameter	Type	Value
Packaging Dimension (LxWxH)	tray	415.0 x 365.0 x 61.0mm
Packaging Quantity		12pcs
Storage Temperature Range		-40°C to +85°C
Storage Humidity	non-condensing	95% RH max.

The product information and specifications may be subject to changes even without prior written notice.The product has been designed for various applications; its suitability lies in the responsibility of each customer. The products are not authorized for use in safety-critical applications without RECOM's explicit written consent. A safety-critical application is an application where a failure may reasonably be expected to endanger or cause loss of life, inflict bodily harm or damage property. The applicant shall indemnify and hold harmless RECOM, its affiliated companies and its representatives against any damage claims in connection with the unauthorized use of RECOM products in such safety-critical applications.

copyright © RECOM Power GmbH, all rights reserved

SIMPEX electronic

www.simpex.ch

Besuchen Sie unseren Simpex E-Shop mit über 12'000 Produkten.

Er bietet Ihnen eine breite Funktionsvielfalt, sowie intelligente Suchfunktionen. Ob Sie den Shop als Einkaufsplattform oder als Produktfinder nutzen – im Simpex E-Shop haben Sie alle Informationen schnell und tagesaktuell zur Hand.

24h und das 365 Tage im Jahr.



Hauptsitz

Simpex Electronic AG
Binzackerstrasse 33
CH-8620 Wetzikon
Telefon +41 44 931 10 10
E-Mail contact@simpex.ch
Internet www.simpex.ch

Quality First. At Your Service.

amakom.ch