1200W Low Profile Economical Enclosed Type Power Supply LRS-1200 series

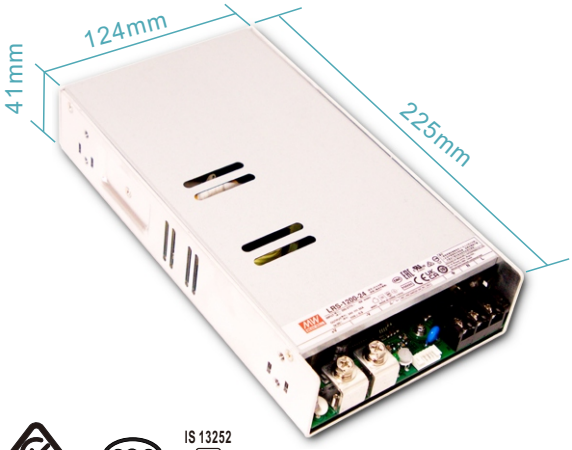

User's Manual
Click Me

UL62368-1 | EN62368-1 EN61558-1 EN61558-2-16 | IEC62368-1 IEC61558-1 IEC61558-2-16 | AS/NZS62368-1 AS/NZS61558-1/-2-16 Note 8 | IS 13252 (By request)

KC62368-1 (By request) | CNS15598-1 | TPTC004

ECO | Automate | Industrial | Security | Network | Telecom

Features

- AC input 180~305Vac input
- Global certificates in multi-fields (ITE 62368-1,Industrial 61558-1/-2-16)
- Compact size with low profile(17W/inch^3)
- 150% peak power @5s
- High effciency up to 94%
- Built-in constant current limiting circuit
- Protections: Short circuit / Overload / Over voltage / Over temperature
- Forced air cooling,cooling fan speed control
- Built-in DC OK/Remote Control/Remote Sense
- -30~+70℃ wide range operation temperature
- Over voltage category(OVC Ⅲ)
- Operating altitude up to 5000 meters
- Conformal coating
- 3 years warranty

Applications

- Industrial automation machinery
- Industrial control system
- Mechanical and electrical equipment
- Electronic instruments, equipments or apparatus

GTIN CODE

MW Search: https://www.meanwell.com/serviceGTIN.aspx

Description

LRS-1200 series is a 1200W single-output enclosed type economical power supply with 41mm of low profile design. Adopting the input of 180~ 305Vac , the entire series provides an output voltage line of 12V, 24V,36V and 48V. In addition to the high efficiency up to 94%, with the built-in long life fan LRS-1200 can work under -30~+70℃with full load. LRS-1200 has the complete protection functions and 3G anti-vibration capability; It is complied with complete international safety regulations. LRS-1200 series serves as a high price-to-performance power supply solution for various industrial applications.

Model Encoding

LRS -1200 - 24

- 24 → Output voltage(12V/24V/36V/48V)
- 1200 → Output wattage
- LRS → Series name

1200W Low Profile Economical Enclosed Type Power Supply LRS-1200 series

SPECIFICATION	LRS-1200-12	LRS-1200-24	LRS-1200-36	LRS-1200-48
OUTPUT				
DC VOLTAGE	**12V**	**24V**	**36V**	**48V**
RATED CURRENT	92A	50A	33.3A	25A
CURRENT RANGE	0 ~ 92A	0 ~ 50A	0 ~ 33.3A	0 ~ 25A
RATED POWER	1104W	1200W	1198.8W	1200W
PEAK CURRENT(5 sec.)	138A	75A	50A	37.5A
PEAK POWER(5 sec.)	1656W	1800W	1800W	1800W
RIPPLE & NOISE (max.) Note.2	200mVp-p	240mVp-p	360mVp-p	360mVp-p
VOLTAGE ADJ.RANGE Note.3	12~ 15V	24 ~ 28V	34 ~ 40V	48 ~ 56V
VOLTAGE TOLERANCE Note.4	±1.0%	±1.0%	±1.0%	±1.0%
LINE REGULATION	±0.5%	±0.5%	±0.5%	±0.5%
LOAD REGULATION	±0.5%	±0.5%	±0.5%	±0.5%
SETUP, RISE TIME	1500ms, 70ms/230Vac 1500ms, 70ms/277Vac at full load			
HOLD UP TIME (Typ.)	10ms/230Vac 10ms/277Vac at full load			
INPUT				
VOLTAGE RANGE Note.5	180 ~ 305Vac 255 ~ 431Vdc			
FREQUENCY RANGE	47 ~ 63Hz			
POWER FACTOR (Typ.)	PF≥0.95/230Vac, PF≥0.93/277Vac at full load			
EFFICIENCY (Typ.)	91%	93%	94%	94%
AC CURRENT (Typ.)	7A/230Vac 5A/277Vac			
INRUSH CURRENT (Typ.)	60A/230Vac 75A/277Vac			
LEAKAGE CURRENT	<2mA / 240Vac / 277Vac			
PROTECTION				
OVER LOAD	Output power >105% rated for more than 5 seconds then shut down o/p voltage, re-power on to recover			
	Constant current limiting for output power >150% rated for more than 5 seconds and then shut down o/p voltage, re-power on to recover			
OVER VOLTAGE	16 ~ 20V	29 ~ 36V	41 ~ 50V	57 ~ 67V
	Protection type : Shut down o/p voltage, re-power on to recover			
OVER TEMPERATURE	Shut down o/p voltage, re-power on to recover			
FUNCTION				
REMOTE CONTROL	Power ON: RC+~RC- 0~0.8Vdc or open Power OFF: RC+~RC- 3.3~10Vdc by external voltage			
REMOTE SENSE	Compensate voltage drop on the load wiring up to 0.3Vdc. Please refer to the Function Manual			
DC OK SIGNAL	Power ON:3.3 ~ 5.6Vdc Power OFF: 0 ~ 1Vdc			
FAN NOISE(Typ.)	Built-in intelligent fan speed control detect by PSU'S internal temperature			
	10% load with Ta=25℃ 45dB			
	70% load with Ta=25℃ 53dB			
ENVIRONMENT				
WORKING TEMP.	-30 ~ +70℃ (Refer to "Derating Curve")			
WORKING HUMIDITY	20 ~ 90% RH non-condensing			
STORAGE TEMP., HUMIDITY	-40 ~ +85℃, 10 ~ 95% RH non-condensing			
TEMP. COEFFICIENT	±0.03%/℃ (0 ~ 30℃)			
VIBRATION	10 ~ 500Hz, 3G 10min./1cycle, 60min. each along X, Y, Z axes			

SAFETY &EMC (Note 6)			
SAFETY STANDARDS	CB IEC62368-1,IEC61558-1/-2-16 UL UL62368-1 DEKRA BS EN/EN62368-1,BS EN/EN61558-1/-2-16 RCM AS/NZS 62368-1,AS/NZS 61558-1/-2-16 CQC GB 4943.1 BSMI CNS15598-1 EAC TPTC 004 approved KC/BIS KC62368-1 and BIS IS 13252（Part 1）:2010 certified, no stock by request, contact sale for inquires		
OVER VOLTAGE CATEGORY	IEC/EN 61558-1/-2-16 (OVC III, altitude up to 2000M) IEC/EN/UL 62368-1 (OVC II, altitude up to 5000M)		
WITHSTAND VOLTAGE	I/P-O/P:4.2KVac I/P-FG:2.1KVac O/P-FG:1.25KVac		
ISOLATION RESISTANCE	I/P-O/P, I/P-FG, O/P-FG:100M Ohms / 500VDC / 25℃/ 70% RH		
EMC EMISSION	**Parameter**	**Standard**	**Test Level / Note**
	Conducted	BS EN/EN55032 (CISPR32),CNS15936	Class A
	Radiated	BS EN/EN55032 (CISPR32),CNS15936	Class A
	Harmonic Current	BS EN/EN61000-3-2	Class A
	Voltage Flicker	BS EN/EN61000-3-3	-----
EMC IMMUNITY	BS EN/EN55035, BS EN/EN61000-6-2		
	Parameter	**Standard**	**Test Level / Note**
	ESD	BS EN/EN61000-4-2	Level 3, 8KV air ; Level 2, 4KV contact
	Radiated	BS EN/EN61000-4-3	Level 3, 10V/m
	EFT / Burst	BS EN/EN61000-4-4	Level 3, 2KV/5KHz
	Surge	BS EN/EN61000-4-5	Level 4, 2KV/Line-Line 4KV/Line-Earth
	Conducted	BS EN/EN61000-4-6	Level 3, 10V
	Magnetic Field	BS EN/EN61000-4-8	Level 4, 30A/m
	Voltage Dips and Interruptions	BS EN/EN61000-4-11	>95% dip 0.5 periods, 30% dip 25 periods, >95% interruptions 250 periods
OTHERS			
MTBF	924.6K hrs min. Telcordia SR-332(Bellcore) ; 93.2K hrs min. MIL-HDBK-217F (25℃)		
DIMENSION (L*W*H)	225*124*41mm (L*W*H)		
PACKING	1.28Kg/9pcs/12Kg/0.81CUFT		

NOTE

1. All parameters NOT specially mentioned are measured at 230Vac input, rated load and 25℃ of ambient temperature.
2. Ripple & noise are measured at 20MHz of bandwidth by using a 12" twisted pair-wire terminated with a 0.1uf & 47uf parallel capacitor.
3. Voltage adjustment can only be operated within the input range of 220-277Vac. If the voltage adjustment is performed outside this range, it may cause abnormal output.
4. Tolerance : includes set up tolerance, line regulation and load regulation.
5. Derating may be needed under low input voltages. Please refer to"Static Characteristics" sections for details.
6. The power supply is considered a component which will be installed into a final equipment. All the EMC tests are been executed by mounting the unit on a 720mm*360mm metal plate with 1mm of thickness. The final equipment must be re-confirmed that it still meets EMC directives. For guidance on how to perform these EMC tests, please refer to “EMI testing of component power supplies.”
   (as available on https://www.meanwell.com//Upload/PDF/EMI_statement_en.pdf)
7. The ambient temperature derating of 5℃/1000m is needed for operating altitude greater than 2000m(6500ft).
8. RCM is on voluntary basis and meets relevant IEC or AS/NZS standards complying with AS/NZS 441.1

※ Product Liability Disclaimer ： For detailed information, please refer to https://www.meanwell.com/serviceDisclaimer.aspx

Block Diagram

fosc : 50KHz~130KHz

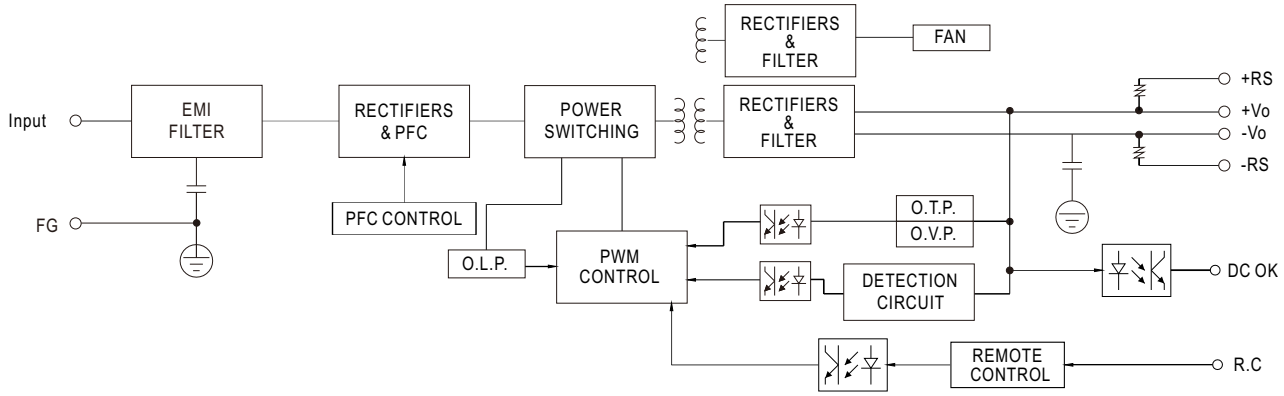

Derating Curve

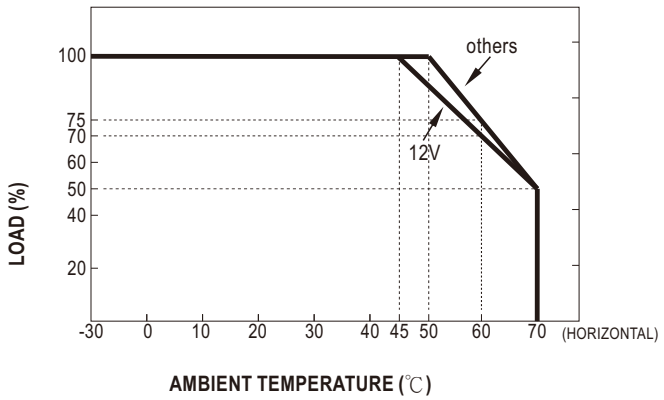

Static Characteristics

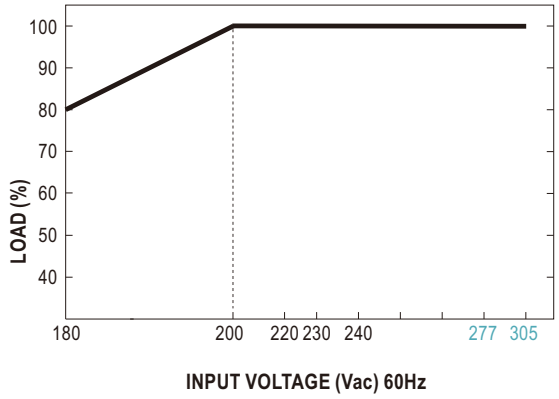

■ Function Manual

1. Peak Power

$$P_{av} = \frac{P_{pk} \times t + P_{npk} \times (T-t)}{T} \leqslant P_{rated}$$

$$Duty = \frac{t}{T} \times 100\% \leqslant 35\%$$

$t \leqslant 5$ sec

P_{av} : Average output power (W)

P_{pk} : Peak output power (W)

P_{npk} : Non-peak output power (W)

P_{rated} : Rated output power (W)

t : Peak power width (sec)

T : Period (sec)

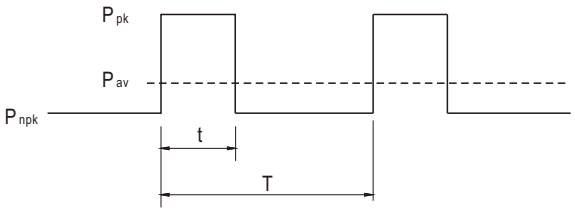

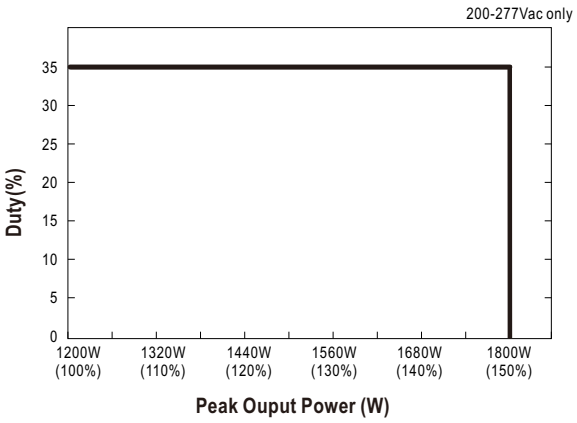

For example (24V model)

V_{in}=220Vac, Duty_max=10%

$P_{av}=P_{rated}$=1200W

P_{pk}=1800W

t≤5sec

$$T \geq \frac{5sec}{10\%} = 50sec$$

$$P_{npk} \leq \frac{TP_{av}-tP_{pk}}{T-t} = 1133.3W$$

2. Remote Control

The PSU can be turned ON/OFF by using the "Remote Control" function with external switch and auxiliary power.

PSU Vo status	Between RC-(pin5) and RC+(pin6)
Power ON	SW open or keep 0~0.8Vdc
Power OFF	SW short or keep 3.3~10Vdc

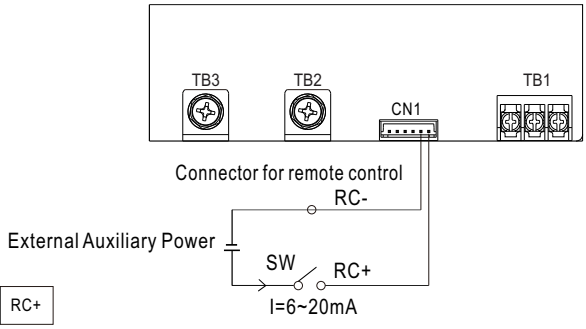

-RS	+RS	GND	DC OK	RC-	RC+

3. Remote Sense

The remote sensing compensates voltage drop on the load wiring up to 0.3 Vdc

-RS	+RS	GND	DC OK	RC-	RC+

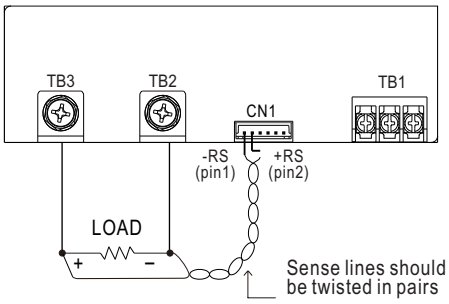

4. DC_OK Signal

DC_OK Signal is a TTL level signal. "High" when PSU turns on.

PSU Vo status	Between DC_OK(pin4) and GND(pin3)
Power ON	3.3 ~ 5.6Vdc
Power OFF	0 ~ 1Vdc

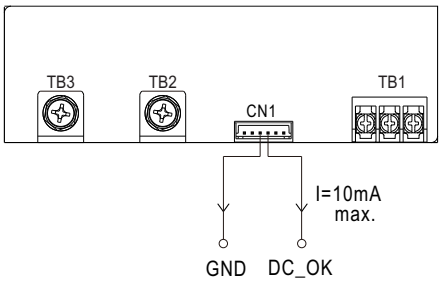

-RS	+RS	GND	DC OK	RC-	RC+

■ Mechanical Specification

Case No. 307A
Unit:mm Tolerance:±1

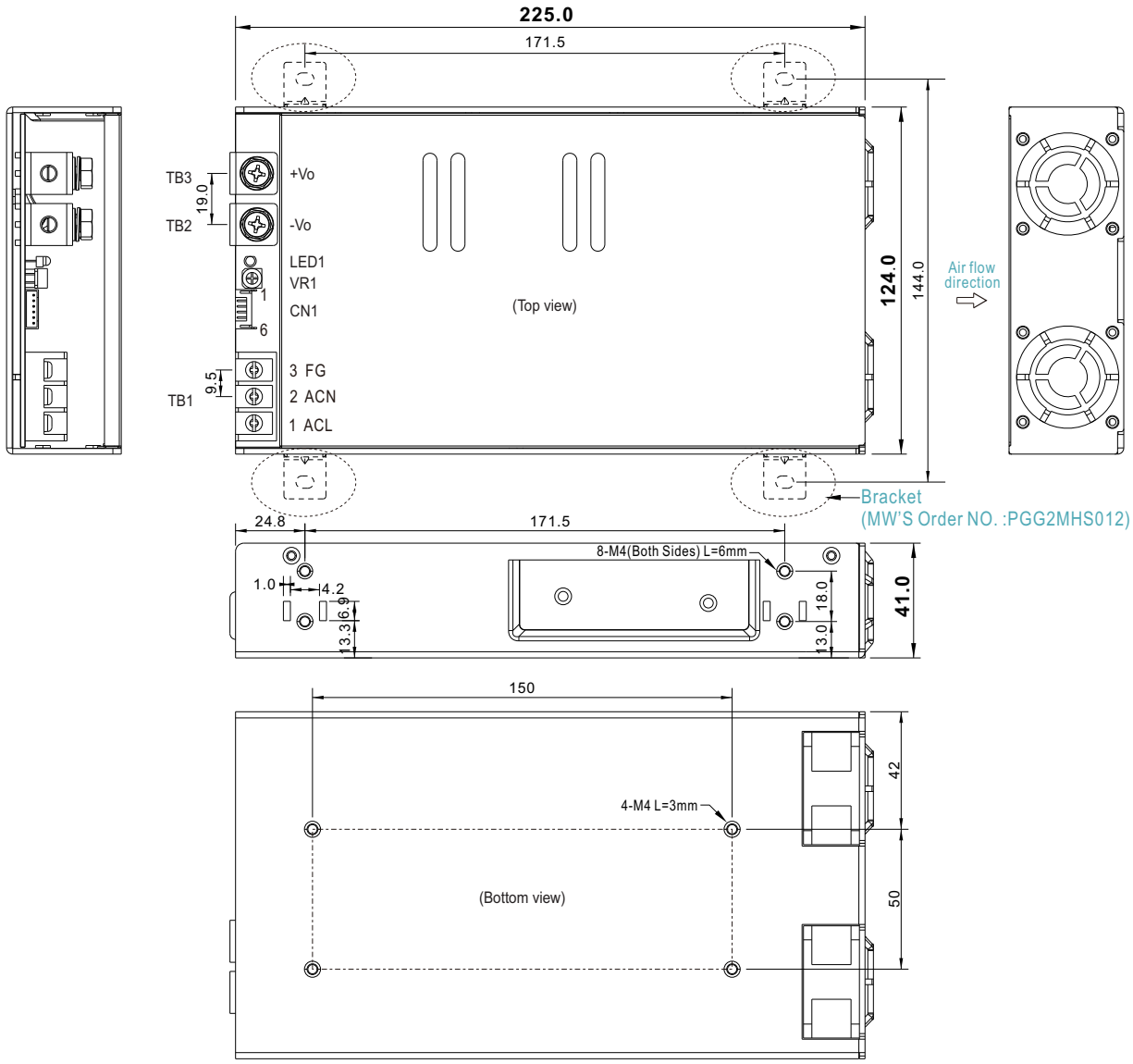

AC Input Terminal(TB1) Pin NO. Assignment

Pin No.	Assignment	Terminal	Screw Size	Mounting torque
1	AC/L	DEGSON DG46S-B-03P-13	M3.5	8~10 Kgf-cm
2	AC/N			
3	⏚			

DC Output Terminal (TB2,TB3) Pin NO. Assignment

Pin No.	Assignment	Terminal	Screw Size	Mounting torque
TB2	-Vo	(MW) HS455	M5	10~12 Kgf-cm
TB3	+Vo			

Control Pin (CN1) : JST S6B-PH-K-S or equivalent

Pin No.	Assignment	Mating Housing	Terminal
1	-RS	JST PHR-6 or equivalent	JST SPH-***T-P0.5* or equivalent
2	+RS		
3	GND		
4	DC_OK		
5	RC-		
6	RC+		

Accessory List

No.	Item		Quantity
1	Control function interface(CN1) mating wire along with LRS-1200 (standard accessory)	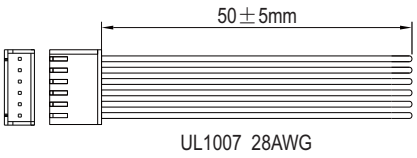	1pcs/per model
2	Bracket MW'S Order NO. :PGG2MHS012 (By request accessory,should ordered seperatey)	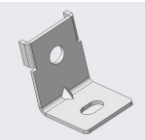	4pcs/per model (Please refer to Installation Diagram)
3	Terminal cover MW'S Order NO. :PEE4TBC-03 (By request accessory,should ordered seperatey)	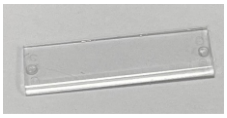	1pcs/per model

Installation Diagram

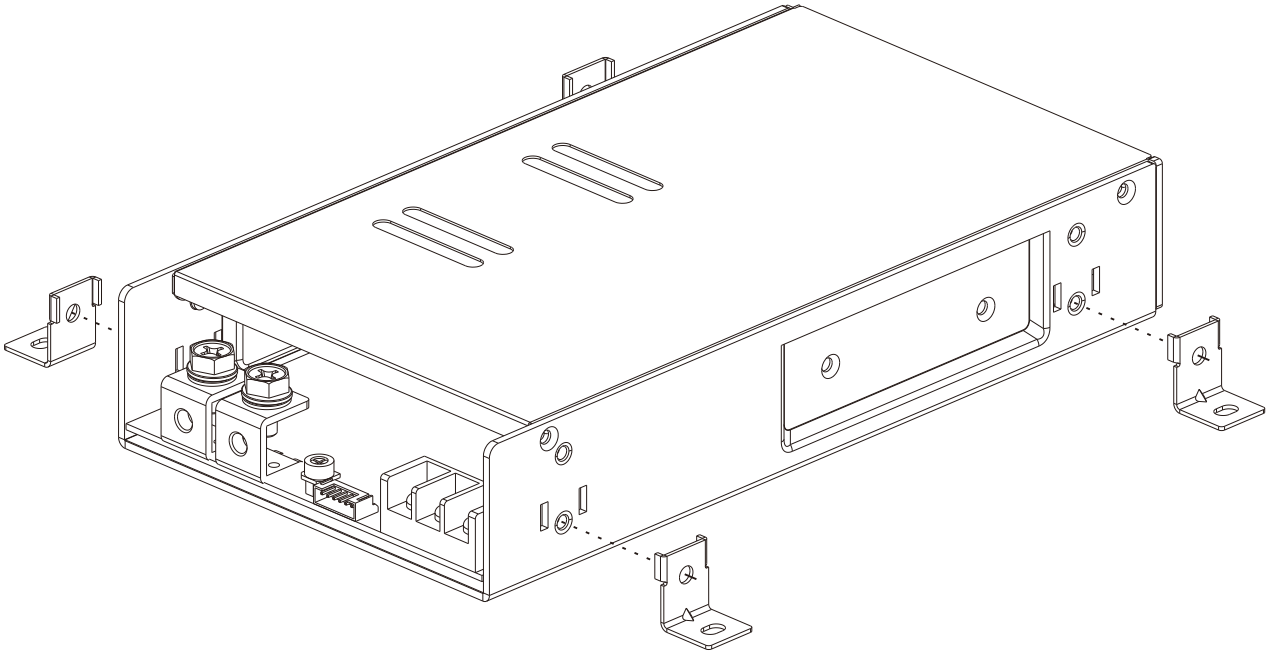

www.simpex.ch

Besuchen Sie unseren Simpex E-Shop mit über 12'000 Produkten.

Er bietet Ihnen eine breite Funktionsvielfalt, sowie intelligente Suchfunktionen. Ob Sie den Shop als Einkaufsplattform oder als Produktfinder nutzen – im Simpex E-Shop haben Sie alle Informationen schnell und tagesaktuell zur Hand.

24h und das 365 Tage im Jahr.

Hauptsitz

Simpex Electronic AG
Binzackerstrasse 33
CH-8620 Wetzikon
Telefon +41 44 931 10 10
E-Mail contact@simpex.ch
Internet www.simpex.ch

Quality First. At Your Service.

amakom.ch