User's Manual
Click Me

UL62368-1 BS EN/EN62368-1 AS/NZS 62368.1 TPTC004 IEC62368-1

Security Network Telecom Automate Industrial

Features

- Universal input 90~305VAC (277VAC available)
- All-in-one function with Power supply, DC-UPS, battery charger and status monitoring in ONE compact unit
- Signal and alarms design meet UL2524,NFPA 1221,BS EN/EN54-4 and GB17945 requirement, with adjustable parameters configurable by communication interface
- Form C relay contacts and LED indicators for AC Fail, Battery Low, Charger Fail, and DC-OK
- Load-dependent high speed battery charging
- Built-in MODBus or CANBus protocol
- Protections: Short circuit / Overload / Over voltage / Over temperature(auto derating) / Battery reverse polarity (No damage) / Battery cut off
- Battery low protection / Battery reverse polarity protection
- -30 ~ +70℃ wide operating temperature
- Cooling by free air convection
- Can be installed on DIN rail TS-35/7.5 or 15
- Charging curve can be set with SBP-001(only for CANBus model)
  (Smart programmer sold separately, please refer to: https://www.meanwell.com/webapp/product/search.aspx?prod=SBP-001)
- 20~100% charging current adjustable by VR
- 2 or 3-stage selectable by DIP S.W
- Suitable for lead acid and lithium-ion batteries
- 3 years warranty

Applications

- Public safety battery back-up (Red box)
- Security system
- Emergency lighting system
- Alarm system
- Uninterruptible DC-UPS system, battery detection system
- Central monitoring system
- Industrial automation

GTIN CODE

MW Search: https://www.meanwell.com/serviceGTIN.aspx

Description

DRS-240 is a 240W AC/DC DIN rail type security power supply series. In addition to the primary output, there is an additional charger circuit that will automatically adjust charge current depending on the primary output current. DRS-240 accepts the universal input between 90VAC and 305VAC, and supports output 12VDC, 24VDC, 36VDC, and 48VDC nominal systems. With high efficiency up to 92%, it can operate with free air convection cooling under -30℃ through 70℃ ambient temperature. In addition to the key protection features such as overload protection, over voltage protection, battery low voltage disconnect, and battery reverse polarity protection, the DRS-240 also provides Form-C contacts and LED indicator alarm signals for AC-fail, battery low, charger circuit fail, and DC-OK to allow easy integration into security systems that comply with local alarm codes.

Model Encoding

DRS - 240 - 48 [ ]

- Function (Blank: Built-in MODBus, CAN: Built-in CANBus)
- Output voltage(12V/24V/36V/48V)
- Rated wattage
- Series name

SPECIFICATION

MODEL		DRS-240-12□	DRS-240-24□	DRS-240-36□	DRS-240-48□
		□=Blank, CAN			
OUTPUT	OUTPUT VOLTAGE Note.2	12V	24V	36V	48V
	CURRENT RANGE	0 ~ 20A	0 ~ 10A	0 ~ 6.6A	0 ~ 5A
	BATTERY CURRENT (CC)(max.)	15.4A	7.7A	5.1A	3.85A
	RECOMMENDED BATTERY CAPACITY(AMP HOURS)Note.3	20 ~ 200AH	10 ~ 100AH	6.6 ~ 66AH	5 ~ 50AH
	TOTAL OUTPUT POWER Note.4	Combined power on all Channels must not exceed 240W, load has priority. 275W peak capability within 5s.			
	RIPPLE & NOISE (max.) Note.5	150mVp-p	240mVp-p	360mVp-p	480mVp-p
	VOLTAGE TOLERANCE Note.6	±1.0%	±1.0%	±1.0%	±1.0%
	LINE REGULATION	±0.5%	±0.5%	±0.5%	±0.5%
	LOAD REGULATION	±0.5%	±0.5%	±0.5%	±0.5%
	SETUP, RISE TIME Note.7	2400ms, 1000ms/230VAC 2400ms, 1000ms/115VAC at full load			
	HOLD UP TIME (Typ.)	16ms/230VAC 10ms/115VAC at full load			
INPUT	VOLTAGE RANGE	90 ~ 305VAC 127 ~ 431VDC			
	FREQUENCY RANGE	47 ~ 63Hz			
	POWER FACTOR (Typ.)	PF>0.95/230VAC PF>0.98/115VAC at full load			
	EFFICIENCY (Typ.)	90%	92%	92%	92%
	AC CURRENT (Typ.)	2.8A/115VAC 1.4A/230VAC			
	INRUSH CURRENT (Typ.)	COLD START 30A/115VAC 60A/230VAC			
PROTECTION	SHORT CIRCUIT	Protection type: Constant current limiting, power will shutdown after 5 sec, re-power on to recover.			
	OVERLOAD	105 ~ 135% rated output power			
		Protection type: Constant current limiting, shutdown output voltage after 5 sec.			
	OVER TEMPERATURE	Automatically drop load with temperature only for bat. load. Protection type : Shut down o/p voltage, recover automatically after temperature goes down.			
	OVER VOLTAGE	Load main output : 16.2 ~ 18.6V	Load main output : 32.4 ~ 37.3V	Load main output : 48.6 ~ 55.9V	Load main output : 64.8 ~ 74.5V
		Protection type : Shut down o/p voltage, re-power on to recover			
	BATTERY CUT OFF	10.5±0.3V	20.9±0.5V	31.3±0.7V	41.8±1V
	REVERSE POLARITY	By internal MOSFET, no damage, recovers automatically after fault condition is removed.			
FUNCTION	FORM-C RELAY – AC FAIL	Signals AC failure and activates when input voltage drops below : 79~89VAC of 120AC, 132~187VAC of 220VAC. Relay contact output, ON : AC OK ; OFF : AC Fail ; max. rating : 30Vdc/1A			
	FORM-C RELAY – CHARGER FAIL	Relay contact output, ON : Charger OK ; OFF : Charger Fail ; max. rating : 30Vdc/1A			
	FORM-C RELAY – DC OK	Signals normal DC output and activates when output voltage > 90% rated value. Relay contact output, ON : DC OK ; OFF : DC Fail ; max. rating : 30Vdc/1A			
	FORM-C RELAY – BATTERY LOW/ ABNORMAL/ DISCONNECTED	Relay contact output, ON : Battery OK ; OFF : Battery Low ; max. rating : 30Vdc/1A			
		Battery low voltage:< 11±0.2V	Battery low voltage:< 22±0.3V	Battery low voltage:< 33±0.4V	Battery low voltage:< 44±0.5V
	BATTERY START	Restart system directly from battery and does not require AC power			
	DC-UPS	UPS switch to battery power within 10ms of AC failure			
	ADJUSTABLE CHARGING CURRENT	20% ~ 100% charging current adjustable by VR			
	BATTERY TEMPERATURE COMPENSATION	The system can change the battery charging voltage by detecting the temperature (Please refer to page 9~10 for more details).			
ENVIRONMENT	WORKING TEMP.	-30 ~ +70℃(Refer to "Derating Curve")			
	WORKING HUMIDITY	20 ~ 90% RH non-condensing			
	STORAGE TEMP., HUMIDITY	-40 ~ +85℃, 10 ~ 95% RH non-condensing			
	TEMP. COEFFICIENT	±0.03%/℃ (0 ~ 50℃) on Load output			
	VIBRATION	10 ~ 500Hz, 5G 10min./1cycle, 60min. each along X, Y, Z axes			
	OPERATING ALTITUDE Note.8	2000 meters / OVC Ⅲ			
	OVER VOLTAGE CATEGORY	Ⅲ; According to Dekra BS EN/EN62368-1; altitude up to 2000 meters			
SAFETY & EMC (Note.9)	SAFETY STANDARDS	UL62368-1, Dekra BS EN/EN62368-1, RCM AS/NZS 62368.1, EAC TP TC 004 approved			
	WITHSTAND VOLTAGE	I/P-O/P: 4KVAC I/P-FG: 2KVAC O/P-FG: 1.5KVAC			
	ISOLATION RESISTANCE	I/P-O/P, I/P-FG, O/P-FG: 100M Ohms/500VDC/25℃/ 70%RH			
	EMC EMISSION	**Parameter**	**Standard**	**Test Level / Note**	
		Conducted	BS EN/EN55032 (CISPR32)	Class B	
		Radiated	BS EN/EN55032 (CISPR32)	Class B	
		Harmonic Current	BS EN/EN61000-3-2	-----	
		Voltage Flicker	BS EN/EN61000-3-2	-----	
	EMC IMMUNITY	BS EN/EN55035 , BS EN/EN61204-3, BS EN/EN61000-6-2(BS EN/EN50082-2)			
		Parameter	**Standard**	**Test Level / Note**	
		ESD	BS EN/EN61000-4-2	Level 3, 8KV air ; Level 2, 4KV contact; criteria A	
		Radiated	BS EN/EN61000-4-3	Level 3, 10V/m ; criteria A	
		EFT / Burst	BS EN/EN61000-4-4	Level 3, 2KV ; criteria A	
		Surge	BS EN/EN61000-4-5	Level 3, 1KV/Line-Line ;Level 3, 2KV/Line-Line-Chassis ;criteria A	
		Conducted	BS EN/EN61000-4-6	Level 3, 10V ; criteria A	
		Magnetic Field	BS EN/EN61000-4-8	Level 4, 30A/m ; criteria A	
	FIRE DETECTION AND FIRE ALARM SYSTEM	Compliance to BS EN/EN54-4			
OTHERS	MTBF	564.7K hrs min. Telcordia SR-332 (Bellcore); 73.3K hrs min. MIL-HDBK-217F (25℃)			
	DIMENSION	85.5*125.2*129.2mm (W*H*D)			
	PACKING	1.19Kg; 8pcs/ 12.5Kg / 1.08CUFT			

NOTE

1. All parameters NOT specially mentioned are measured at 230VAC input, rated load and 25℃ of ambient temperature.
2. Variable with charger voltage when battery is connected.
3. This is Mean Well's suggested range. Please consult your battery manufacturer for their suggestions about maximum charging current limitation.
4. If load current increases, the system will prioritize load current demand and automatically reduce the battery charging current.
5. Ripple & noise are measured at 20MHz of bandwidth by using a 12" twisted pair-wire terminated with a 0.1 μF & 47 μF parallel capacitor.
6. Tolerance : includes set up tolerance, line regulation and load regulation.
7. Length of set up time is measured at cold first start. Turning ON/OFF the power supply may lead to increase of the set up time.
8. The ambient temperature derating of 3.5℃/1000m with fanless models and of 5℃/1000m with fan models for operating altitude higher than 2000m(6500ft).
9. Installation clearances : 40mm on top, 20mm on the bottom, 5mm on the left and right side are recommended when loaded permanently with full power. In case the adjacent device is a heat source, 15cm clearance is recommended.
10. The power supply is considered a component which will be installed into a final equipment. All the EMC tests are been executed by mounting the unit on a 720mm*360mm metal plate with 1mm of thickness. The final equipment must be re-confirmed that it still meets EMC directives. For guidance on how to perform these EMC tests, please refer to "EMI testing of component power supplies." (as available on https://www.meanwell.com//Upload/PDF/EMI_statement_en.pdf)

※ Product Liability Disclaimer : For detailed information, please refer to https://www.meanwell.com/serviceDisclaimer.aspx

Block Diagram

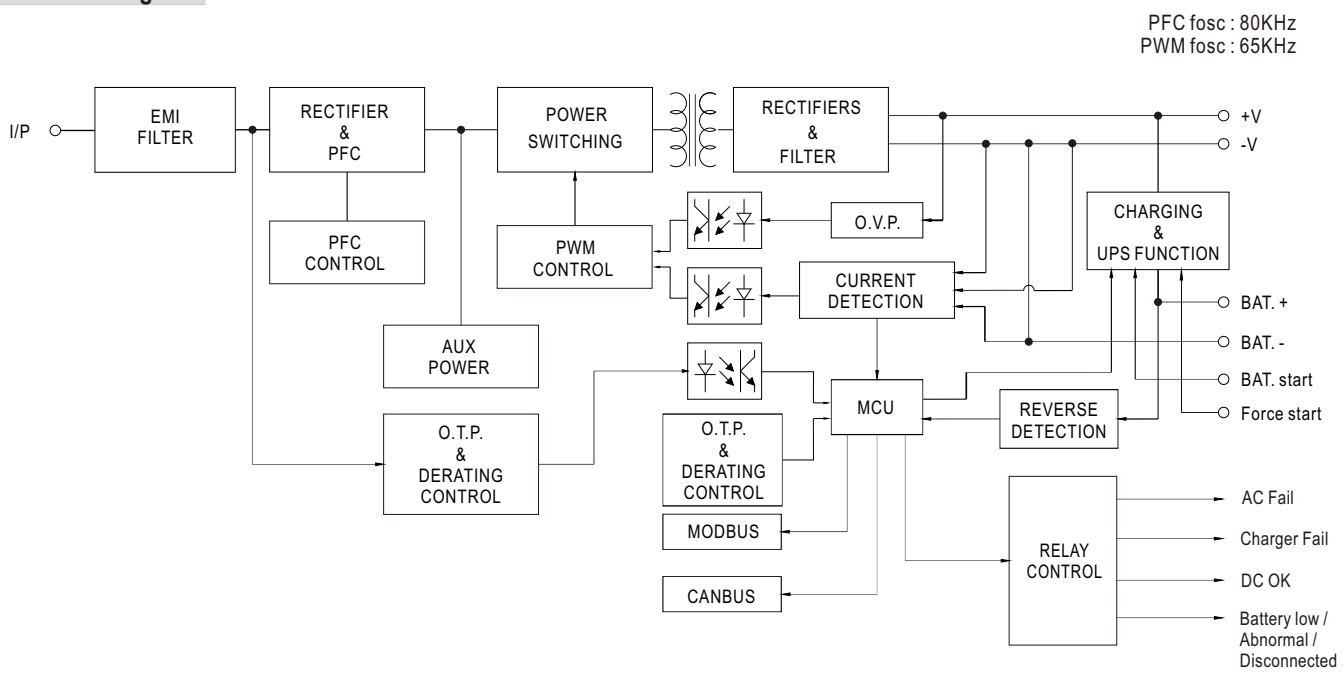

Derating Curve

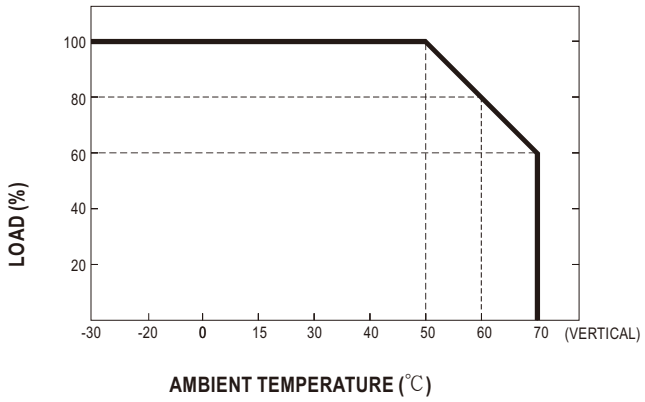

Static Characteristics

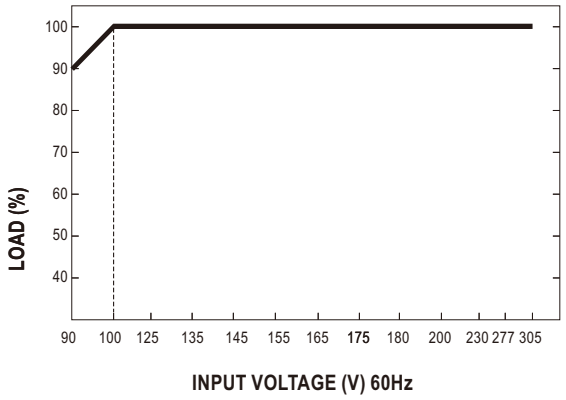

■ Function manual

1.Alarm signals

(1) Alarm Signal is sent out through " AC fail " & " Battery low " & " Charger fail "pins via relay contact.

(2) An external voltage source is required for this function. The maximum applied voltage is 30Vdc and the maximum sink current is 1A. Please refer to Fig 1.2.

(3) Table1.1 explains the alarm function built in the power supply

INPUT	AC fail		DC OK		Battery low/Abnormal /Disconnected		Charger fail	
	2-3	1-3	5-6	4-6	8-9	7-9	11-12	10-12
AC only	closed	open	closed	open	open	closed	-----	-----
AC + BAT.	closed	open	closed	open	closed	open	-----	-----
BAT. only	open	closed	closed	open	closed	open	-----	-----
Low BAT. (<30% capacity)	-----	-----	-----	-----	open	closed	-----	-----
Charger Fail	-----	-----	-----	-----	-----	-----	open	closed

Table 1.1 Explanation of alarm signal

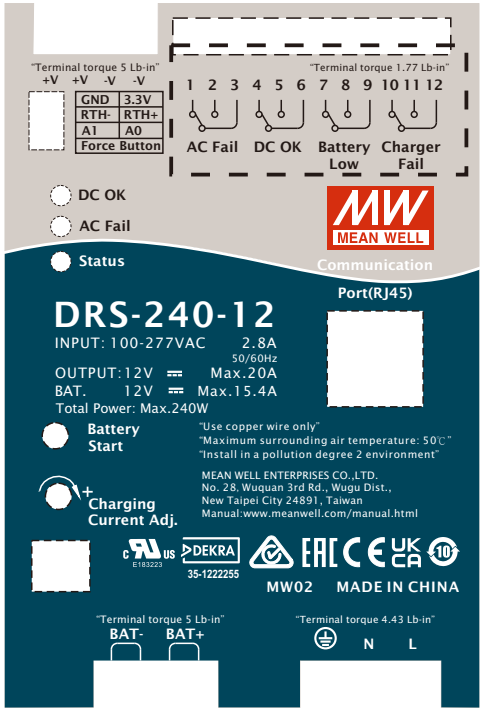

Fig 1.1 alarm signal Terminals

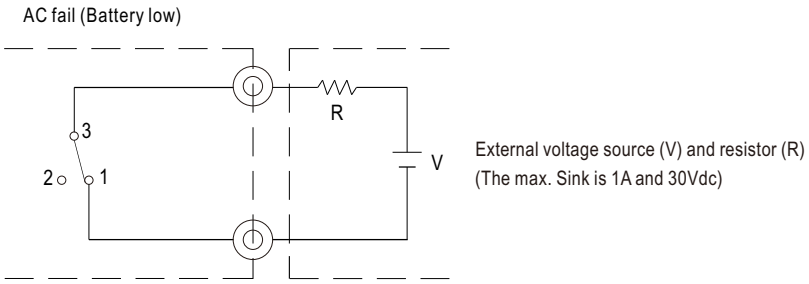

Fig 1.2 Internal circuit of AC fail (Battery low), via relay contact

2.DC-UPS function

When AC mains drops below:79~89VAC of 120VAC,132~187VAC of 220VAC, UPS function will activate and power source switch battery backup.

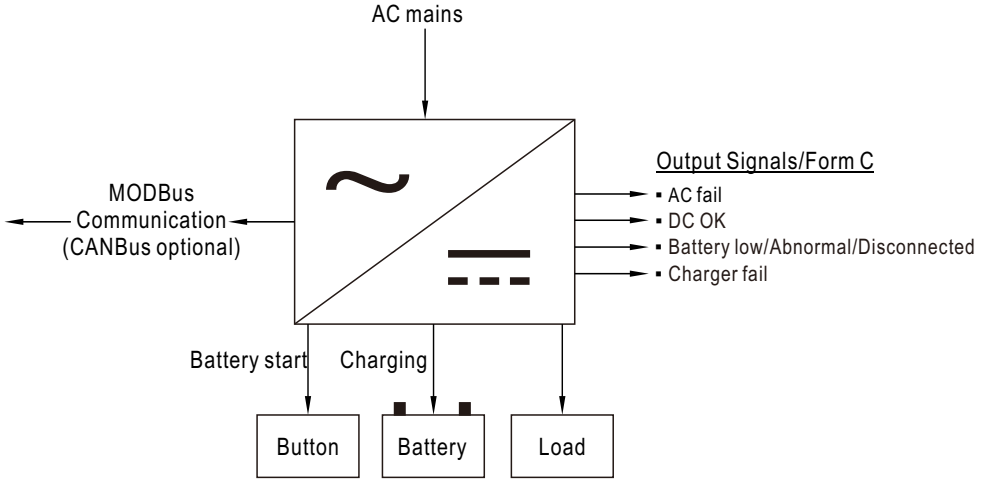

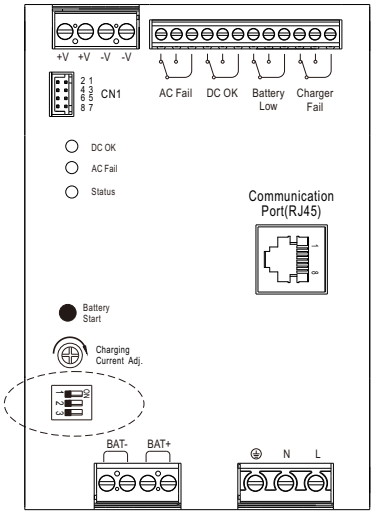

3.Charger setting

3.1.1 2 or 3-stage selectable by DIP S.W

※ This series provides 2 or 3 stage charging curve.

1	OFF: 3 stage(Default), ON: 2 stage
2	Charging curve adjustable:see below
3	

3.1.2 Charging curve can be adjustable by DIP S.W

◎ **2 stage** charging curve

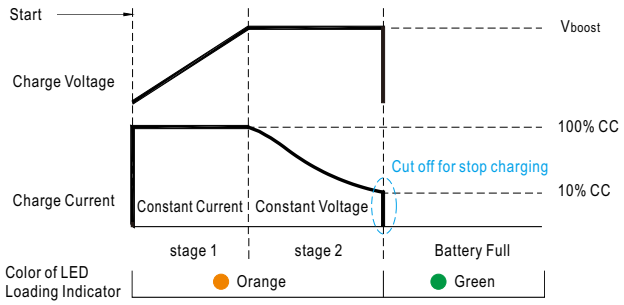

State	DRS-240-12□	DRS-240-24□	DRS-240-36□	DRS-240-48□
Constant Current	15.4A	7.7A	5.1A	3.85A
Vboost	14.4V	28.8V	43.2V	57.6V

◎ Suitable for lead-acid batteries (flooded, Gel and AGM) and Li-ion batteries (lithium iron and lithium manganese).

◎ Default **3 stage** charging curve

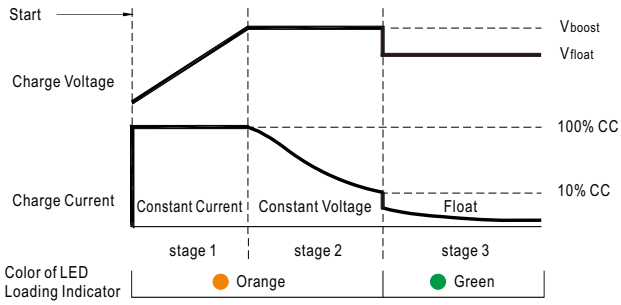

State	DRS-240-12□	DRS-240-24□	DRS-240-36□	DRS-240-48□
Constant Current	15.4A	7.7A	5.1A	3.85A
Vboost	14.4V	28.8V	43.2V	57.6V
Vfloat	13.8V	27.6V	41.4V	55.2V

◎ Suitable for lead-acid batteries (flooded, Gel and AGM) and Li-ion batteries (lithium iron and lithium manganese).

※ The default curve is programmable, whereas other pre-defined curves can be activated by the means of the DIP S.W; please refer to the table below and the Mechanical Specification.

◎ Embedded **2 stage** charging curve

DIP SW position		12V model		
2	3	Description	CC(default)	Vboost
OFF	OFF	Default, programmable	15.4A	14.4
ON	OFF	Pre-defined, gel batter		14.0
OFF	ON	Pre-defined, flooded battery		14.2
ON	ON	Pre-defined, AGM battery,LiFe04		14.6
DIP SW position		24V model		
2	3	Description	CC(default)	Vboost
OFF	OFF	Default, programmable	7.7A	28.8
ON	OFF	Pre-defined, gel batter		28.0
OFF	ON	Pre-defined, flooded battery		28.4
ON	ON	Pre-defined, AGM battery,LiFe04		29.2
DIP SW position		36V model		
2	3	Description	CC(default)	Vboost
OFF	OFF	Default, programmable	5.1A	43.2
ON	OFF	Pre-defined, gel battery		42
OFF	ON	Pre-defined, flooded battery		42.6
ON	ON	Pre-defined, AGM battery,LiFe04		43.8
DIP SW position		48V model		
2	3	Description	CC(default)	Vboost
OFF	OFF	Default, programmable	3.85A	57.6
ON	OFF	Pre-defined, gel battery		56.0
OFF	ON	Pre-defined, flooded battery		56.8
ON	ON	Pre-defined, AGM battery,LiFe04		58.4

◎ Embedded **3 stage** charging curve

DIP SW position		12V model			
2	3	Description	CC(default)	Vboost	Vfloat
OFF	OFF	Default, programmable	15.4A	14.4	13.8
ON	OFF	Pre-defined, gel batter		14.0	13.6
OFF	ON	Pre-defined, flooded battery		14.2	13.4
ON	ON	Pre-defined, AGM battery,LiFe04		14.6	14.0
DIP SW position		24V model			
2	3	Description	CC(default)	Vboost	Vfloat
OFF	OFF	Default, programmable	7.7A	28.8	27.6
ON	OFF	Pre-defined, gel batter		28.0	27.2
OFF	ON	Pre-defined, flooded battery		28.4	26.8
ON	ON	Pre-defined, AGM battery,LiFe04		29.2	28.0
DIP SW position		36V model			
2	3	Description	CC(default)	Vboost	Vfloat
OFF	OFF	Default, programmable	5.1A	43.2	41.4
ON	OFF	Pre-defined, gel battery		42	40.8
OFF	ON	Pre-defined, flooded battery		42.6	40.2
ON	ON	Pre-defined, AGM battery,LiFe04		43.8	42.0
DIP SW position		48V model			
2	3	Description	CC(default)	Vboost	Vfloat
OFF	OFF	Default, programmable	3.85A	57.6	55.2
ON	OFF	Pre-defined, gel battery		56.0	54.4
OFF	ON	Pre-defined, flooded battery		56.8	53.6
ON	ON	Pre-defined, AGM battery,LiFe04		58.4	56.0

3.2 SBP-001 can adjust the charging curves (Only CANBus Model)

◎ **2 stage** charging curve (programable)

DIP SW position		12V model		
2	3	Description	CC(default)	Vboost
OFF	OFF	Default, programmable	15.4A	14.4
DIP SW position		24V model		
2	3	Description	CC(default)	Vboost
OFF	OFF	Default, programmable	7.7A	28.8
DIP SW position		36V model		
2	3	Description	CC(default)	Vboost
OFF	OFF	Default, programmable	5.1A	43.2
DIP SW position		48V model		
2	3	Description	CC(default)	Vboost
OFF	OFF	Default, programmable	3.85A	57.6

◎ **3 stage** charging curve (programable)

DIP SW position		12V model			
2	3	Description	CC(default)	Vboost	Vfloat
OFF	OFF	Default, programmable	15.4A	14.4	13.8
DIP SW position		24V model			
2	3	Description	CC(default)	Vboost	Vfloat
OFF	OFF	Default, programmable	7.7A	28.8	27.6
DIP SW position		36V model			
2	3	Description	CC(default)	Vboost	Vfloat
OFF	OFF	Default, programmable	5.1A	43.2	41.4
DIP SW position		48V model			
2	3	Description	CC(default)	Vboost	Vfloat
OFF	OFF	Default, programmable	3.85A	57.6	55.2

※ SBP-001 is a programmer, particularly for MEAN WELL's various programmable battery charger models to program the parameters of charging curves, such as the Constant current (CC), tapper current(TC), Constant voltage (CV), float voltage (FV) and so on, to accommodate the diversified battery specification in industry. With the design accounting for simplicity and convenience, users can easily configure MEAN WELL's programmable battery chargers with SBP-001 programmer and the computer; all of the setups are able to be finished easily by the means of the specific software.

Note:(1) Tapper current(TC) default is 10%, can be fine tuned from 2% to 30% by SBP-001 with computer or CANBus Interface.
(2) The SBP-001 only supports CANBus version(DRS-240-xxCAN).
(3) Please contact MEAN WELL for more details.

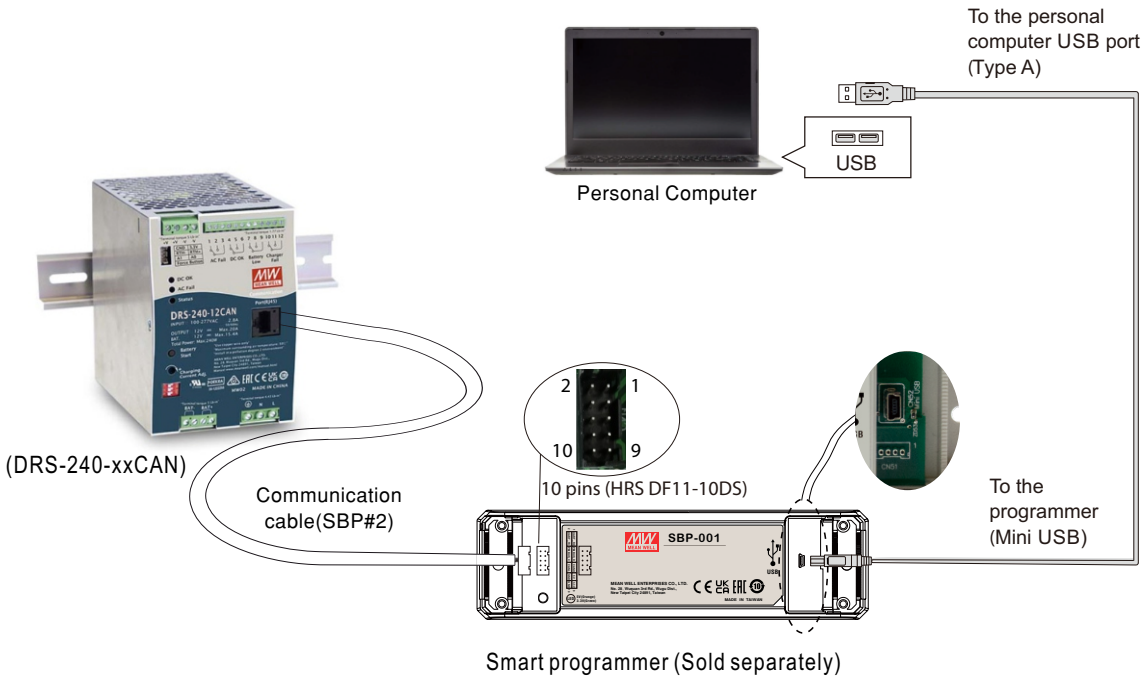

※ **User Interface**:

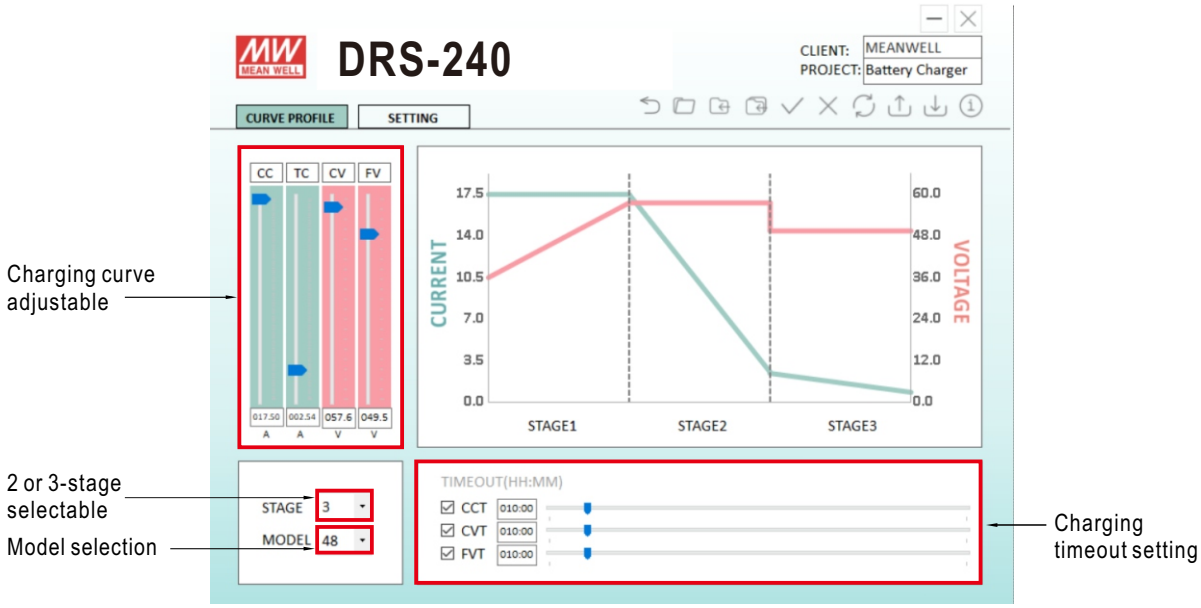

※ Communication cable for DRS series

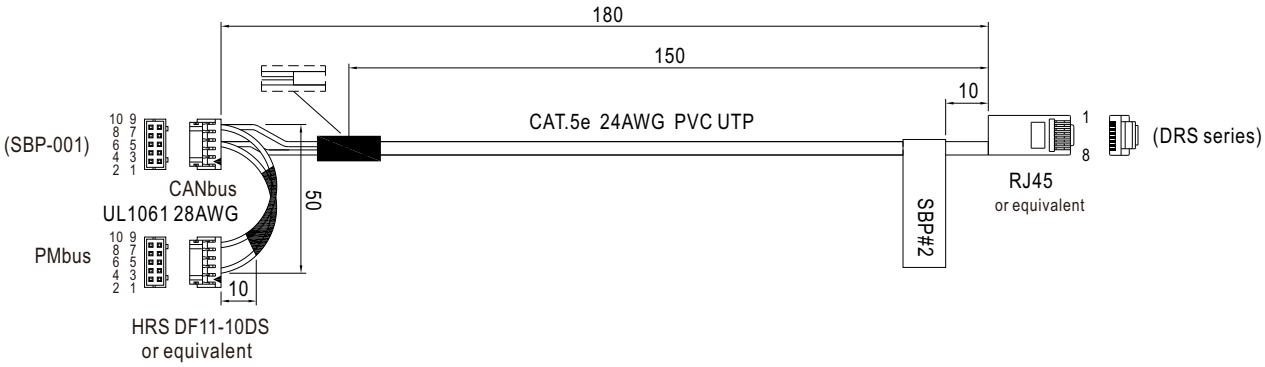

DRS series pin assigment :

Connector	Pin Assigment									
SBP-001 10pin connector (Connector part No.:HRS DF11-10DS) 10 9 / 2 1	1	2	3	4	5 (CANH)	6 (CANL)	7	8	9	10 (GND)
DRS-240 RJ45 Communication port	-----	-----	-----	-----	6	7	-----	-----	-----	8
Wire color	-----	-----	-----	-----	Green	White/Brown	-----	-----	-----	Brown

3.3 Communication interface

Charging parameters can be modified by MODBus (DRS-240-xx) or CANBus(DRS-240-xxCAN) communication commands.
For details, please refer to: http://www.meanwell.com/manual.html

4.Power Boost Mode

The maximum current on the load output is the 2 times the rated current for 4 minutes max. and 3 times the rated current for 4 seconds max.
For example (48V model):

Output load

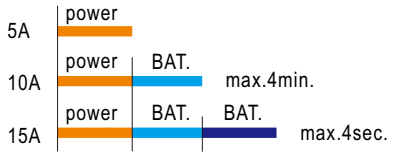

5.Battery temperature compensation

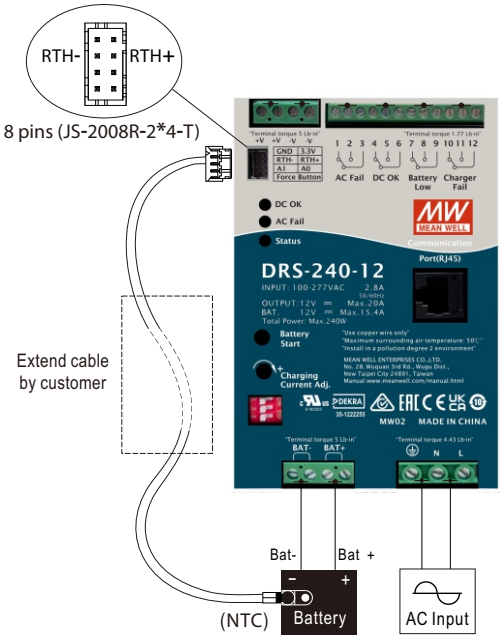

◎ To exploit the temperature compensation function, please attach the temperature sensor(NTC) which is enclosed with DRS-240, to the battery or the battery's vicinity.

◎ DRS-240 is able to work normally without the temperature sensor(NTC).

5.1 The compensation parameters included Disable, -3, -4 and -5mV/℃/Cell .It can be modified by communication command of CANBus, MODBus. The factory default value is -3mV/℃/Cell.

5.2 It will be regarded as normal temperature and will not be compensated when temperature compensation resistance is not connected; And temperature compensation will only compensate lead-acid battery, not lithium iron battery.

5.3 The range of temperature compensation is 0-40℃, normal temperature 25℃ is the central value, no compensation; When the temperature is < 0 ℃ or > 40 ℃, the current temperature compensation value will be limited to 0 ℃ or 40℃.

24V model as an example

Assuming that V_{boost}=28.8V, temperature compensation set to -5mV/℃/Cell by communication, TEMP_bat is NTC temperature detection.

The compensating voltage can be calculated by the following equation:

V_{boost_comp}=28.8V-5mV*(TEMP_bat -25℃)*12Cell

Max. compensation voltage:

V_{boost_H}=28.8V-5mV*(0℃-25℃)*12Cell=30.3V

Min. compensation voltage:

V_{boost_L}=28.8V-5mV*(40℃-25℃)*12Cell=27.9V

5.4 Accessory List

※ NTC Sensor and mating wire along with DRS-240 (Standard accessory)

	Item	Quantity
1	NTC sensor wire Part No.: NSG05C250J5 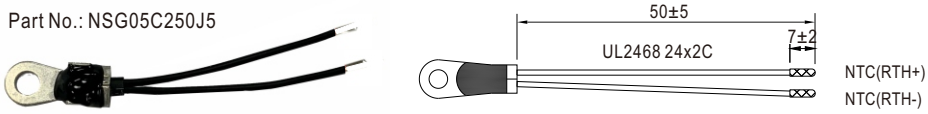	1
2	Mating wire 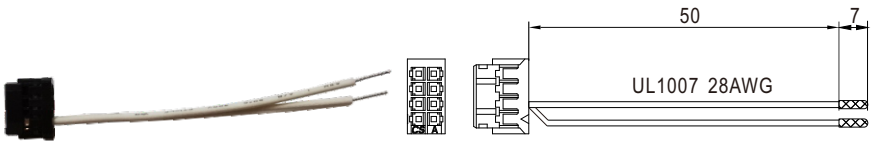 JS-2007-2*4-T or equivalent	1

Connection Diagram
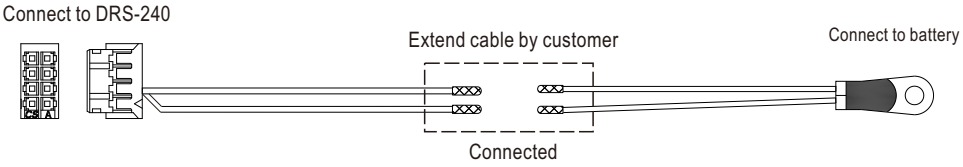

6.LED alarm

Function		Description	Output of alarm
DC OK		DC fail	OFF
		DC OK	Green
AC fail		AC fail	Red
		AC OK	OFF
Status	Charging status	Float	Green
		Charging: CC/CV	Orange
	System diagnosis	Discharging	Orange: 1 Blink/Pause
		Charger fail	Red : 1 Blink/Pause
		Battery overvoltage / Battery reverse polarity	Red : 2 Blink/Pause
		Battery low / No Battery	Red : 3 Blink/Pause
		Battery discharge peak power timeout.	Red : 4 Blink/Pause
		Over load / short	Red : 5 Blink/Pause
		Over temperature	Red : 6 Blink/Pause
		Timeout	Red : 7 Blink/Pause

■ Suggested Application

1.Backup connection for AC interruption

(1) Please refer to Fig2.1 for suggested connection.

The power supply charges the battery and provides energy to the load at the same time when AC mains is OK.

The battery starts to supply power to the load when AC mains fails.

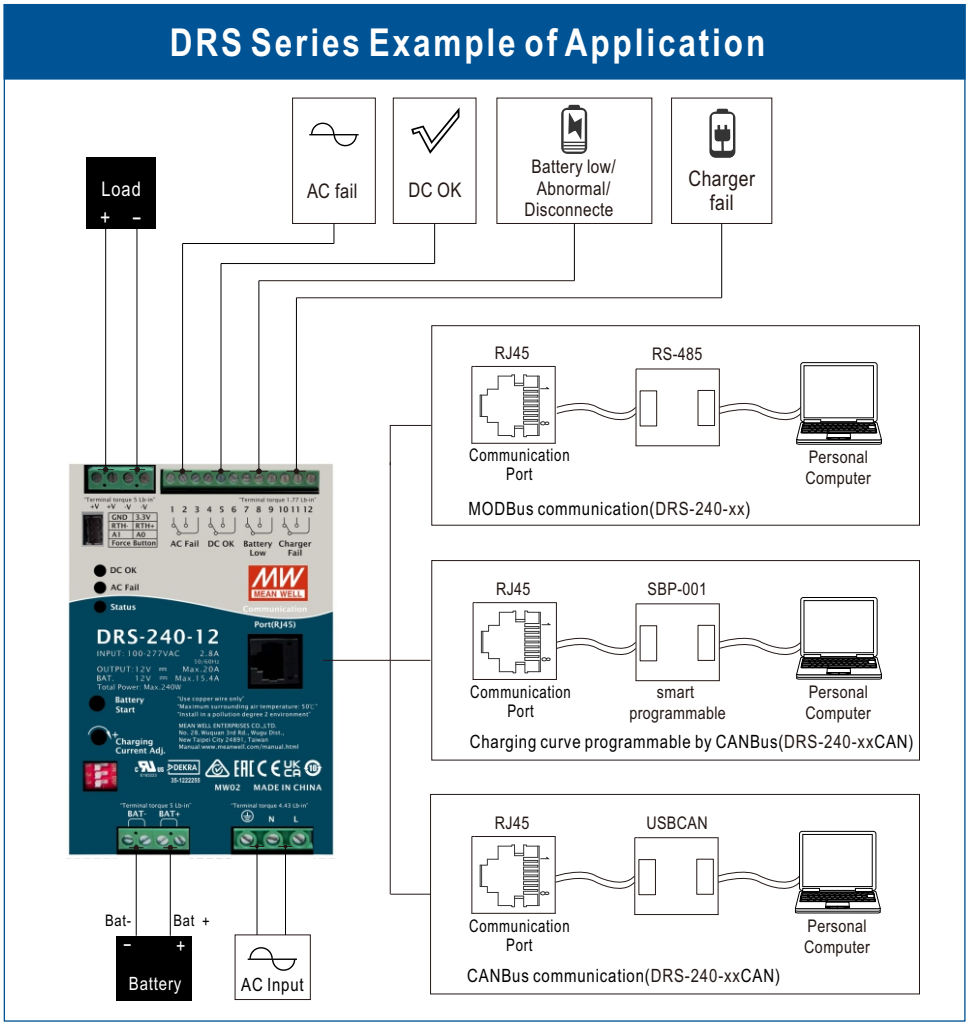

Fig 2.1 Suggested system connection

(2) Backup time

Backup time depends on:

※ from the load current

※ from the size of the batteries.

The following table is an example (battery capacity at C10 discharge rate).

Load \ Battery	10AH	20AH	50AH	100AH	200AH
1.5A	350min	13h	33h	67h	133h
3A	125min	350min	17h	33h	67h
5A	60min	180min	600min	20h	40h
7.5A	35min	90min	350min	13h	27h
10A	23min	60min	240min	10h	20h
15A	13min	35min	125min	350min	13h

■ Mechanical Specification

(Unit: mm , tolerance ± 1mm)

Case No. 984G

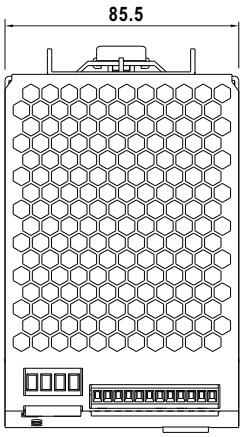

Terminal Pin No. Assignment (TB4)

Pin No.	Assignment
1,2,3	AC fail
4,5,6	DC OK
7,8,9	Battery low/ Abnormal/ Disconnected
10,11,12	Charger fail

Terminal Pin No. Assignment (TB3)

Pin No.	Assignment
1,2	+V
3,4	-V

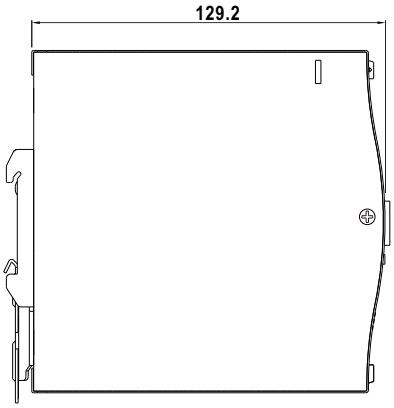

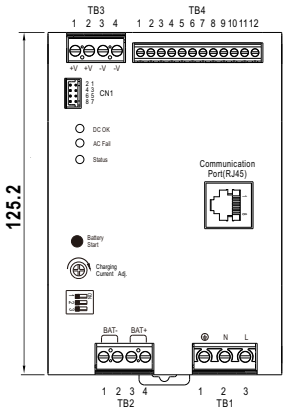

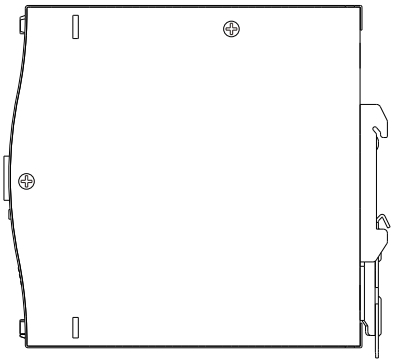

Terminal Pin No. Assignment (TB2)

Pin No.	Assignment
1,2	BAT.-
3,4	BAT. +

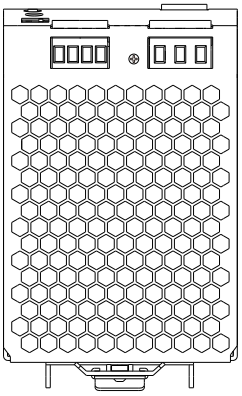

Terminal Pin No. Assignment (TB1)

Pin No.	Assignment
1	FG ⏚
2	AC/N
3	AC/L

Force button Connector (CN1):
JS-2008R-4*2-T or equivalent

Pin No.	Assignment
1	3.3V
2	GND
3	RTH+
4	RTH-
5	A0
6	A1
7,8	Open: Normal Short: Force start

Terminal Pin No. Assignment (RJ45)

Pin No.	Function	Description
1,2,3,4,5	NC	Retain for future use.
6	D-/DB	For MODBus model:Serial Date used in the MODBus interface.
	CANH	For CANBus model:Date line used in the CANBus interface.
7	D+/DA	For MODBus model:Serial Clock used in the MODBus interface.
	CANL	For CANBus model:Date line used in the CANBus interface.
8	GND-AUX	Auxillary voltage output GND. The signal return is isolated from the output terminals(+V & -V).

■ Installation Instruction

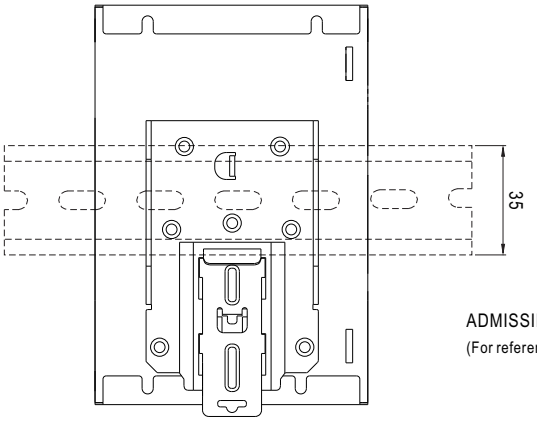

Back View

This series fits DIN rail TS35/7.5 or TS35/15.
For installation details, please refer to the Instruction manual.

ADMISSIBLE DIN rail:TS35/7.5 OR TS35/15
(For reference only. Not included with unit.)

■ Installation Manual

Please refer to : http://www.meanwell.com/manual.html

www.simpex.ch

Besuchen Sie unseren Simpex E-Shop mit über 12'000 Produkten.

Er bietet Ihnen eine breite Funktionsvielfalt, sowie intelligente Suchfunktionen. Ob Sie den Shop als Einkaufsplattform oder als Produktfinder nutzen – im Simpex E-Shop haben Sie alle Informationen schnell und tagesaktuell zur Hand.

24h und das 365 Tage im Jahr.

Hauptsitz

Simpex Electronic AG
Binzackerstrasse 33
CH-8620 Wetzikon
Telefon +41 44 931 10 10
E-Mail contact@simpex.ch
Internet www.simpex.ch

Quality First. At Your Service.

amakom.ch